CUSTOMER CONNECTION GUIDE

EDTI CUSTOMER CONNECTION GUIDE
Release Date: March 3, 2022 - Effective Date: April 1, 2022

DISCLAIMER

It is the responsibility of the Customer to meet all requirements of the Customer Connection Guide, and all other applicable legislation, regulations, codes, and guidelines prior to receiving a new connection. The Customer shall meet all requirements of the newest version of this document enforced at the time of the project application for service. The Customer Connection Guide may not cover the requirements of every service connection, and EPCOR Distribution & Transmission Inc. (EDTI) may at its sole discretion apply additional requirements, reasonably necessary for a site's connection. In the event a project is cancelled or closed for any reason, including at the discretion of EDTI, the Customer shall be required to meet all requirements of the newest version of this document enforced at the time of reapplication for service.

The newest version of the Customer Connection Guide may be obtained at www.epcor.com.

If you require assistance in locating the newest version, please contact EDTI at 780-412-3128.

AUTHENTICATIONS & PERMIT TO PRACTICE

Permit to Practice

SCOPE:	STAMP:
Entire Document	PERMIT TO PRACTICE EPCOR DISTRIBUTION & TRANSMISISON INC RM SIGNATURE: _____ RM APEGA ID#: 88862 DATE: 2022-Mar-04 PERMIT NUMBER: P007061 The Association of Professional Engineers and Geoscientists of Alberta (APEGA)

General Guide

SCOPE:	STAMP:
All portions of the guide not otherwise specified in the sections, drawings, diagrams, or other aspects detailed in the other authentication scopes listed below.	PROFESSIONAL ENGINEER ALBERTA RAMIR LALLANI 04 March 2022 ID# 123547

Metering

SCOPE:	STAMP:
Section 10 – Metering and all portions therein, unless authenticated otherwise.	PROFESSIONAL ENGINEER ALBERTA RAMIR LALLANI 04 March 2022 ID# 123547

Underground Secondary Service

SCOPE:	STAMP:
Section 5 – Underground Secondary Service and all portions therein, unless authenticated otherwise.	PROFESSIONAL ENGINEER ALBERTA CHRISTOPHER WOLSEGGER ID # 154880 04 March 2022

Generation & Battery Storage

SCOPE:	STAMP:
Section 11 – Generation & Battery Storage and all portions therein, unless authenticated otherwise.	PROFESSIONAL ENGINEER ALBERTA SHANE L FRASER ID 88862 2022-Mar-04

Contents

Where substantive changes have been made to the requirements or information in the guide from the previously released edition, the section has been marked in the left margin with a delta symbol (Δ). For more information, see Section 1.4 – Updates from Previous Version.

1.0 INTRODUCTION 1

1.1 Δ Introduction 2
1.2 Contact Information 2
1.3 Δ Errata & Addendums 2
1.4 Δ Updates from Previous Version 2
1.5 Δ Legal Requirements 3
1.6 Δ Variances 4
1.7 Δ Asset Ownership 5

2.0 DEFINITIONS (Δ) 12

3.0 CHOOSING YOUR CONNECTION AND COMMON INFORMATION 16

3.1 Important Information Applicable to All Service Types 17
3.2 Connection Process and Time Frames 17
3.3 Δ Applying for Service 17
3.4 Project Overview 18
3.5 Δ Selecting the Service Type 18
3.6 Δ General Service Requirements 19
3.7 Δ Service Entry Point 20
3.8 Δ Easements and Utility Rights-of-Way 21
3.9 Duplex, Triplex, and Fourplex Units 21
3.10 Δ Clearances 22
3.11 Δ Residential Ground Electrodes 25

3.12 Trenching and Backfilling 25
3.13 Main Switch or Breaker Minimum Interrupting Capacity 27
3.14 Δ Electrical Room 27
3.15 Δ Maximum Horsepower of Motors 28
3.16 Equipment Access 28
3.17 Site Housekeeping 29
3.18 Service Interruptions 29
3.19 Service Connection Agreements 30
3.20 Permits and Inspections 31
3.21 Metering and Choosing Your Retailer 31

4.0 AERIAL SECONDARY SERVICE 55

4.1 General Information 56
4.2 Δ Service Type General Requirements 56
4.3 Δ Service Pole Location 56
4.4 Δ Poles on Private Property 56
4.5 Δ Attachment Method and Location 57
4.6 Wire Installation 58

5.0 UNDERGROUND SECONDARY SERVICE 65

5.1 General Information 66
5.2 Service Type General Requirements 66
5.3 Multi-Family Developments and Mobile Home Parks 66
5.4 Four Party Joint-Use Trench for Single-Family Residential Installations 67
5.5 Δ Service Ducts 67
5.6 Duct Bends 67
5.7 Δ Conductors 68
5.8 Cable Installation 68
5.9 Underground Residential Distribution Areas 69
5.10 Underground Secondary Service in an Aerial Area (Secondary Lateral) 70

6.0 PADMOUNT TRANSFORMER SERVICE 76

6.1 General Information 77
6.2 Service Type General Requirements 77
6.3 Multi-Family Developments and Mobile Home Parks 77
6.4 Δ Padmount Transformers and Switching Cubicles 78
6.5 Δ Ground Grids and Guardrails for Padmounted Equipment 80
6.6 Δ Blast Walls 81
6.7 Δ Service Ducts 81
6.8 Duct Bends 82
6.9 Δ Ground-Mounted Pull Boxes 83
6.10 Δ Conductors 83
6.11 Δ Cable Installation 84

7.0 PRIMARY METERED SERVICE 127

7.1 Δ General Information 128
7.2 Service Type General Requirements 128
7.3 Switchgear Submission Drawings 128
7.4 Δ Service Ducts 129
7.5 Duct Bends 130
7.6 Δ Ground-Mounted Pull Boxes 130
7.7 Pull Boxes in Buildings 130
7.8 Δ Switching Cubicles 131
7.9 Δ Ground Grids and Guardrails for Padmounted Equipment 133
7.10 Conductors 134
7.11 Cable Installation 134
7.12 Coordination Study 134
7.13 Δ Switchgear 135
7.14 Breaker Specifications (Main Service) 136
7.15 Protection and Control Requirements (Overcurrent Protection) 136
7.16 Protection with Pilot Wire Relaying 136
7.17 Aerial Services 137
7.18 Commissioning 137

8.0 NETWORK SERVICE 145

8.1 General Information 146
8.2 Service Type General Requirements 146
8.3 Δ Drawing Requirements 146
8.4 Δ Service Ducts 147
8.5 Duct Bends 147
8.6 Δ Ground-Mounted Pull Boxes 148
8.7 Δ Pull Boxes in Buildings 148
8.8 Conductors 148
8.9 Cable Installation 149
8.10 Δ Termination 149

9.0 UNMETERED SERVICE 152

9.1 Δ General Information 153
9.2 Service Type General Requirements 153
9.3 Δ As-Built Drawing Requirements 154
9.4 Δ Servicing Location 155
9.5 Δ Service Ducts (Underground) 155
9.6 Duct Bends (Underground) 155
9.7 Conductors (Underground) 156
9.8 Δ Cable Installation (Underground) 156
9.9 Δ Cable Identification (Underground) 156
9.10 Δ Attachment Methods (Overhead) 156
9.11 Δ Wire Installation (Overhead) 157

10.0 METERING 158

10.1 Contact for Metering Disconnections and Reconnections 159
10.2 Δ Requesting Metering Transformers (600V or Less) 159
10.3 Δ General Requirements 159
10.4 Δ Residential – 200 Amps or Less 160
10.5 Δ Residential – Greater than 200 Amps 162
10.6 Δ Commercial – 200 Amps or Less 163
10.7 Δ Commercial – Greater than 200 Amps 164
10.8 Δ Network Area – 200 Amps or Less 165
10.9 Δ Network Area – Greater than 200 Amps 165
10.10 Δ Primary Metering 167

11.0 GENERATION & BATTERIES 178

11.1 Δ General Information 179
11.2 Process 181
11.3 Δ Planning 182
11.4 Δ Application 183
11.5 Δ Review of Application 186
11.6 Δ Generation Metering 187
11.7 Inspection 187
11.8 Δ Commissioning 187

12.0 ADDITIONAL INFORMATION 194

12.1 Δ Checklists 195
12.2 Operations 195
12.3 Tree Trimming 195
12.4 Hydro-Excavation Procedure (Hydrovac) over Primary and Secondary Cables on Private Property 195
12.5 Δ Temporary Connections 196
12.6 Relocation of EDTI Equipment 197
12.7 Δ Demolitions 198
12.8 Splicing Primary and Secondary Cables on Private Property 199
12.9 Cable Faults 199
12.10 Privacy Policy 200

IMAGES

6.1	Δ Example of Coiled Cables – Inside Base (180 Degree View)	86
6.2	Δ Example of Coiled Cables – Looking into Base	86
7.1	Δ Examples of Fully Insulated Switchgear Terminations	138
10.1	Δ Acceptable Combination Main Breaker and Meter Socket	169
10.2	Δ Examples of Residential Line Side Meter Termination	170
10.3	Δ Examples of 3-Phase Metering Transformer Installations	171
11.1	Single Line Diagram Example	192
11.2	Site Plan Example	193

TABLES

3.1	Δ Project Overview	32
3.2	Δ Service Types	36
3.3	Main Switch or Breaker Minimum Interrupting Capacity	38
3.4	Maximum Horsepower of Motors Permitted	39
3.5	Maximum Setback Distances for Padmount Equipment	40
4.1	Δ Aerial Services – Acceptable Wire and Spans	59
4.2	Aerial Services – Attachment Methods	59
5.1	Δ Minimum Acceptable Single Phase Secondary Conductors for Underground Services	71
6.1	Δ Primary Cable, Duct and Pull Box Requirements	87
7.1	Δ Cable Terminations in Customer-Owned Switchgear	139
8.1	Main Switch or Breaker Minimum Interrupting Capacity – Downtown Secondary Network Services	150
8.2	Δ Acceptable Conductors and Conduit Size – Downtown Secondary Network Services	151
10.1	Δ Meter Socket and Instrument Enclosures	172
11.1	Project Overview	188
11.2	Canadian Standard Approvals	189

DRAWINGS

3.1	EPCOR Primary Voltage Service Areas – 15kV, 25kV, and Downtown Network	41
3.2	EPCOR Primary Voltage Service Areas – Downtown Network (Detailed)	42
3.3	EPCOR Primary Voltage Service Areas – 5kV	43
3.4	Δ Right-of-Way Requirement for Single Phase Switching Cubicle, Single Phase Transformer, or 3 Phase Transformer	44
3.5	Δ Right-of-Way Requirement for Single Phase Switching Cubicle, Single Phase Transformer, or 3 Phase Transformer with 2.0m Gas Right-of-Way	45
3.6	Δ Right-of-Way Requirement for 3 Phase Switching Cubicle	46
3.7	Δ Right-of-Way Requirement for 3 Phase Switching Cubicle with 2.0m Gas Right-of-Way	47
3.8	Typical Transformer Alcove Layout	48
4.1	Customer Owned Pole Installation on Private Property – Straight Line	60

4.2	Customer Owned Pole Installation on Private Property – Dead End Pole	61
4.3	Heavy Duty Attachment Devices	62
4.4	Typical Overhead Aerial Service Installation	63
4.5	Typical Residential Aerial Service Attachment Details	64
5.1	Sample of Submission for Multi-Family Developments	72
5.2	Typical Underground Residential Service Installation Four Party Trench	73
5.3	Typical Underground Residential Service Installation on Property	75
6.1	Δ Installation of Precast Concrete 4-Way Pull Box	88
6.2	Primary Cable, Duct, and Pull Box Examples for Examples A and B	91
6.3	Δ Installation of Precast Concrete Base for Single Phase Transformers	92
6.4	Δ Installation of Precast Concrete Base for Three Phase Transformers	96
6.5	Δ Installation of Precast Concrete Base for 4-Way 15kV Single Phase 200A Dead Front Switching Cubicle	101
6.6	Δ Installation of Precast Concrete Base for 4-Way 25kV Single Phase 200A Dead Front Switching Cubicle	106
6.7	Δ Installation of Precast Concrete Base for 4-Way 3 Phase 15kV Switching Cubicle (All Variants)	111
6.8	Δ Installation of Precast Concrete Base for 4-Way 3 Phase 25kV Switching Cubicle (All Variants)	117
6.9	Δ Typical Guardrail for Bollard & Guard Post Installation	123
6.10	Ground Grid Requirements for 15kV and 25kV Switching Cubicles and Three Phase Transformer Next to Each Other	126
10.1	Multi-Meter Installation	173
10.2	Meter and Test Block Enclosure – Current Transformer Rate Meter Socket	174
10.3	Three Phase Instrument Transformers for Installations Over 200A – Enclosure Layout Diagram	175
10.4	Instrument Transformer Metering Layout	176
10.5	Instrument Transformer Wiring Diagram	177

CHECKLISTS & FORMS

1.1	Third-Party Authorization and Consent Form	6
1.2	Variance Approval Form (Sample)	9
3.1	Application Checklist	49
12.1	New Power Connection Site Ready Checklist	201
12.2	Single Phase Transformer Inspection Stages Checklist	203
12.3	Three Phase Transformer Inspection Stages Checklist	205

APPENDIX

I	Distribution Asset Ownership Guide	207

1.0

Introduction

1.1 Δ INTRODUCTION

The information in this guide is divided into sections by topics and service types, to make it easier for you to find what you need. It is necessary that you read all the information contained within this document before starting your project to avoid mistakes, errors, and omissions that will result in costly rework and delays.

The first 3 sections (Introduction, Definitions, and Choosing Your Connection and Common Information) are common to all service types. The Metering, Generation & Batteries, and Additional Information sections may also be applicable to any type of service.

It is important to meet the requirements of this document before applying for service. This document provides the guidance necessary to successfully request the vast majority of services. In some cases this document will request you Contact us for more information. **When Customers call EDTI for information contained in this document, they will be referred back to this document for the information they are seeking.**

EDTI looks forward to helping you achieve your project goals.

1.2 CONTACT INFORMATION

For inquiries about new electrical service connections, or upgrading existing electrical service connections, please email ces@epcor.com or call 780-412-3128.

For general EPCOR inquires please call 310-4300 or 1-800-667-2345, or visit www.epcor.com.

1.3 Δ ERRATA & ADDENDUMS

Errata and addendums will be issued from time-to-time to provide important updates to this document between major version releases. These documents will be attached to the beginning of the official Customer Connection Guide posted on EPCOR.com. The errata and addendums will indicate their applicability to new and existing projects.

It is the responsibility of the Customer to meet all requirements of errata and addendums, and to ensure they are referencing the newest version of the Customer Connection Guide with the applicable errata and addendums included.

1.4 Δ UPDATES FROM PREVIOUS VERSION

EDTI will amend the Guides, from time to time, to reflect changes to the electric utility industry, changes in EDTI's requirements or the changing needs of EDTI's Customers. Where substantive changes have been made to the requirements or information in the guide from the previous released edition, the section has been marked in the left margin with a delta symbol (Δ). Users of this guide should note that change markers are not intended to mark all changes to text, drawings, organization of the document, etc.; for instance, minor grammatical changes and reordering of information are not marked.

1.5 Δ LEGAL REQUIREMENTS

1.5.1 Δ Disclaimer

Refer to the second page of this guide (following the cover page) for the disclaimer regarding the use of this guide.

1.5.2 Δ Engineering Authentication Requirements and Exceptions

EDTI requires authenticated (stamped) engineering work for all applicable submissions where EDTI will rely on the technical information in the document to complete our work. EDTI's requirements are in alignment with the Engineering and Geoscience Professions Act of Alberta and the requirements of the Association of Professional Engineers and Geoscientists of Alberta.

Authenticated engineering work will be required, except in the following circumstances:

Where the final building will be:

a. for **residential use** only (not including hotels, motels, or like uses) and consist of no more than 4 attached units.

b. for **hotel, motel, or similar uses** only and be no more than 3 stories in height, nor exceed 400m^2 (4305 ft^2) of total gross area.

c. for **assembly or institutional use** only, and be no more than 3 stories in height, nor exceed 300m^2 (3,229 ft^2) of total gross area.

d. for **warehouse, business and personal services occupancy, for mercantile occupancy or for industrial occupancy use** only, and be no more than 3 stories in height, nor exceed 500m^2 (5,381 ft^2) of total gross area.

e. for **farm buildings** not for public use.

f. for **relocatable industrial camp buildings.**

(Note: The occupancy uses above are defined per the Alberta Building Code. Institution use shall be considered the same as assembly use. Warehouse use shall be considered the same as industrial use.)

Documents provided for temporary service connections shall be authenticated to these same requirements. Temporary services to construction buildings (E.g. skidded office trailers, as known as "ATCO trailers") shall be considered 'relocatable industrial camp buildings' for the purposes of authentication.

In the event of a conflict between EDTI's requirements, and the requirements set in the applicable laws, regulations, bylaws, codes, and directives of other authorities having jurisdiction, the more stringent requirement shall apply.

EDTI reserves the right to require authenticated engineering work at its sole option, including in circumstances where exceptions typically would apply. In these cases, EDTI will provide its specific written requirements to the applicant or their representative at the time of identification.

1.5.3 Δ Other Authentication Requirements

Depending on the nature of your project, you may require certain documents to be authenticated by professionals other than engineers. This may include architects, landscape architects, archaeologists, legal land surveyors, biologists, and others. It is your responsibility as the owner to determine what authentication requirements apply to your project. Missing or incomplete authentications will result in delays and extra costs for your project. Be sure to check all relevant legislation, regulation, codes, bylaws, etc. to confirm your unique project needs.

1.5.4 Δ Third-Party Authorizations

EDTI is committed to protecting Customer's information, and will not release information to third-parties without written permission from the Customer.

Consultants, contractors, and any other party acting on behalf or support of the Customer require a Third-Party Authorization and Consent Form completed by the Customer. The form must clearly indicate the name(s) of the individuals and organizations authorized to receive information. See Form 1.1 – Third-Party Authorization and Consent Form for a blank copy.

1.6 Δ VARIANCES

The Customer Connection Guide provides the requirements for Customer service connections. Unless **prior** written approval has be obtained from EDTI before construction, Customers and their representatives are expected to follow and meet all requirements within the Customer Connection Guide.

In some unusual cases, it may not be possible to meet the requirements of the guide, or the guide may not address a unique situation. In these extraordinary cases it may be necessary for a variance from the Customer Connection Guide to be granted. To accommodate these situations, EDTI will complete and issue a Variance Approval Form. This form shall accompany all EDTI Customer projects where a variance to the Customer Connection Guide requirements has be approved by EDTI. Failure to meet the requirements without this form will result in your installation failing inspection, delays to your project, and rework at the Customer's expense. See Form 1.2 – Variance Approval Form (Sample) for a sample copy.

Variances will not be granted where the variance is being sought to reduce costs, the scope of work, or to expedite the work. The issuing of a Variance Approval Form shall not provide variance approval for requirements outside of the Customer Connection Guide; including, but not limited to, other EDTI guidelines, standards, agreements, and contracts. If a requirement exists in two or more governing documents, approval from each governing party will be required – note that this may include two or more variance approvals for the same company or entity, but different groups or individuals within that company or entity.

1.7 Δ ASSET OWNERSHIP

Knowing where EDTI's system ends and the Customer's system begins can sometimes be difficult. To provide clarity and a consistent approach EDTI has provided its Distribution Asset Ownership Guide in Appendix 12.1. This document addresses the majority of ownership cases, but there may be rare instances where special agreements, contracts, codes, and laws may apply. Contact us if you have questions or concerns.

1.7.1 Δ Assets Built to Part 3 Requirements

When an asset is built to Canadian Electrical Code – Part 3 requirements, and is not compliant with Canadian Electrical Code – Part 1, that asset shall be turned over to EDTI prior to energization. This is a requirement of the Alberta Electrical Utilities Code, and Canadian Electrical Code. Such assets shall be contributed assets, and shall not receive reimbursement unless allowed under EDTI's Terms & Conditions.

FORM 1.1

THIRD-PARTY AUTHORIZATION AND CONSENT FORM

Third-Party Authorization and Consent Form

2022-MARCH-01

EPCOR Distribution & Transmission Inc.

Customer Connections

EPCOR Distribution & Transmission Inc. ("EPCOR") is committed to protecting your information.

For this reason, we require your written consent prior to disclosing information about your EPCOR service or project information to any Third-Party, or interacting with any Third-Party acting on your behalf.

To ensure your request is processed efficiently, please provide all the following information and sign the authorization below. *Please print clearly.*

Customer (Property Owner) Information

Primary Contact/Account Holder Name:	Other Account Holder Names*:	
Name of Business/Organization: (if applicable)		
Site Address (the "Property"):		
City:	Province:	Postal Code:
Primary Contact's Phone Number:	Primary Contact's E-Mail Address: (optional)	

**** NOTE:*** *Where there is more than one account holder, EPCOR may be unable to fully provide all information authorized by this consent, unless all persons named on the account have signed this consent form.*

I/we, the undersigned, agree to the following:

1) I authorize EPCOR to release any information related to my EPCOR service and project ("customer information"), for the Property listed above to the individual(s) and organization(s) named and listed below.
2) I authorize the individual(s) and organization(s) named and listed below to provide information to EPCOR on my behalf regarding my EPCOR service and project, for the Property.
3) I authorize the individual(s) and organization(s) named and listed below to act on my behalf regarding my account, property, and project, for the Property listed above.
4) I understand that I must notify EPCOR immediately, in writing at ces@epcor.com, if I choose to no longer allow the individual(s) and organization(s) named and listed below to request or receive information. I acknowledge that this authorization is valid for a period of two years from the date signed or when my project is energized, whichever occurs first.
5) I understand that the individual(s) and organization(s) named and listed below includes their/its employees, consultants, contractors and agents.
6) I acknowledge and agree that EPCOR has no control over, and shall bear no responsibility or liability for the actions of a Third-Party with respect to the specific customer information released by EPCOR in accordance with this consent form.

Initial:_____

Authorized Third-Party Information #1

Individual(s) or Organization(s) authorized to act as a Third-Party:		
Name of Business/Organization: (if applicable)		
Address:		
City:	Province:	Postal Code:
Phone Number:	E-Mail Address:	

Authorized Third-Party Information #2

Individual(s) or Organization(s) authorized to act as a Third-Party:		
Name of Business/Organization: (if applicable)		
Address:		
City:	Province:	Postal Code:
Phone Number:	E-Mail Address:	

Authorized Third-Party Information #3

Individual(s) or Organization(s) authorized to act as a Third-Party:		
Name of Business/Organization: (if applicable)		
Address:		
City:	Province:	Postal Code:
Phone Number:	E-Mail Address:	

Account Holder Signature(s)

Primary Contact/Account Holder Signature	Other Account Holder Signature
Primary Contact/Account Holder Printed Name	Other Account Holder Printed Name
Date	Date

Please submit this form with your application. If you have any questions about this form, please contact EPCOR Customer Engineering Services at ces@epcor.com.

FORM 1.2

VARIANCE APPROVAL FORM (SAMPLE)

Customer Connection Guide - Variance Approval Form

2022-MARCH-01

EPCOR Distribution & Transmission Inc.

Customer Connections

The Customer Connection Guide provides EPCOR Distribution and Transmission Inc. ("EPCOR") requirements for customer service connections. **Unless prior written approval has been obtained from EPCOR, customers and their representatives must follow and meet all requirements within the Customer Connection Guide.**

This form shall accompany all customer projects where EPCOR has approved a variance to the Customer Connection Guide requirements. This form shall not provide variance approval for requirements outside of the Customer Connection Guide, including, but not limited to, other applicable EPCOR guidelines, standards, codes, agreements, and contracts.

Customer Project Information

EPCOR Project Name:		Variance #:
WR#:	WO#:	
Customer/Account Holder Name:	Primary Contact Name:	
EPCOR Designer Name:	EPCOR Project Manager Name:	

Variance Details

Attach additional pages as required to provide details.

Specific Requirements from the Customer Connection Guide that a variance is being sought for: *(Must include the version of the Guide and section being referenced, and the specific guide verbiage, drawing, etc., for the requirement.)*

SAMPLE

WR#:	WO#:	Variance #:

Justification for Variance:
(A clear reason why the requirement cannot be met shall be provided.)

Variance details:
(A clear technical description of the variance requirements shall be provided. The requirements listed here shall replace those requirements referenced above from the Customer Connection Guide.)

SAMPLE

Variance Decision

☐ Approved

☐ Rejected

Approval Signatures

(All three signatures must be present for the variance to be valid.)

Designer Signature:	Engineer/Meter Foreman Signature:	CES/Metering Manager Signature:
Designer Name:	Engineer/Meter Foreman Name:	CES/Metering Manager Name:
Date:	Date:	Date:

2.0

Definitions (Δ)

Aerial Area – Parts of a region where electricity is delivered with primarily overhead power lines.

AHJ – Authority Having Jurisdiction

AWG – American Wire Gauge

Blast Wall – A heavy wall used to isolate buildings or areas that contain highly combustible or explosive materials, or to protect a building or area from blast damage when exposed to explosions.

CCG – Customer Connection Guide

CEC – Canadian Electrical Code

Civil Work – The completion, installation, repair, or replacement of ductwork, concrete bases, trenching, ground disturbance, guardrails, manholes, vaults, pull boxes, or landscaping on property owned by the Customer.

Demand – The maximum rate at which energy is delivered (expressed in kilowatts or kilovolt-amps) at a given instant, or averaged over any designated period of time.

Distribution Tariff – A distribution fee or charge prepared by EDTI and approved by the Alberta Utilities Commission.

EDTI – EDTI Distribution and Transmission Inc., the electrical division of EPCOR Utilities Inc.

Final (Finished) Grade – The final level of the soil (grade) or hard surface (concrete, asphalt, etc.) as prepared for the finished site landscaping and/or surfacing. Does not include sod, decorative rocks, mulch, or other non-soil or non-traffic supporting materials.

Flicker – Fluctuating electrical loads that lead to a noticeable change in the output of various devices.

Generating Customer – A Customer interconnected to EDTI's electric distribution system with the ability to export electrical energy to EDTI's distribution system.

Harmonic Load – A total amount of a portion of the voltage that is a multiple of the fundamental wave frequency.

Horizontal Clearance – The distance measured horizontally.

Instrument Transformer – High-accuracy current or voltage transformers used for revenue metering.

Interrupting Capacity – The highest current at rated voltage that the device can interrupt.

kV – Kilovolt

kVA – Kilovolt-amp

kW – Kilowatt

kWh – Kilowatt-hour

Line Side – The side that is located toward EDTI's system.

Load – The demand and/or energy required to operate equipment.

Load Customer – A Customer interconnected to EDTI's electric distribution system for the purpose of purchasing electricity for their own use.

Load Side – The side that is located toward the Customer's equipment.

Manhole – A covered opening, generally on a street, that provides access for maintenance or repairs to underground electrical systems.

MCM – Thousand circular mils.

Meter Socket – A meter-mounting device for installing a self-contained meter.

Minnesota Mounds – An above-ground mound of dirt used for septic systems.

Padmount Transformer – A ground-level transformer that sits on a concrete base.

Pedestal – A grade-mounted utility box that houses connections and switches for electrical connections.

Point of Service – The electrical connection point at which EDTI's service conductors are connected to the conductors or apparatus of a Customer, which is more particularly defined in EDTI's Asset Ownership Guide.

Pole-Mounted Transformer – A transformer mounted on a utility pole.

Power Factor – The efficiency of an electrical circuit to deliver usable power.

Primary Conductor – A high-voltage utility conductor in excess of 750 volts.

Primary Duct – A conduit in which high-voltage conductors are installed.

Primary Fault – A short circuit in the high-voltage distribution system.

Pull Box – An intermediate enclosure in a conduit system to aid in the installation of conductors.

Retailer – A company that sells or provides retail electricity services directly to Customers.

Rough Grade – the establishment of surface grades and elevations preceding the final grade.

Secondary Conductor – A low-voltage wire or combination of wires that carries an electrical current at 750V or less.

Secondary Duct – A conduit in which low-voltage conductors are installed.

Secondary Fault – A short circuit in the secondary system.

Self-Contained Meter – A meter rated for carrying the total current and voltage of the circuit.

Service Connection – The facilities required to physically connect the Customer's facilities to EDTI's electric distribution system to permit the Customer to obtain Distribution Access Service.

Service Entry Point (SEP) – The civil infrastructure connection point at which EDTI's civil infrastructure ends and is connected to the Customer's property or civil infrastructure, which is more particularly defined in EDTI's Asset Ownership Guide.

Setback Distance – The minimum allowable distance to the point where new equipment or other devices can be installed.

Switchgear – The combination of electrical disconnect switches, fuses, or circuit breakers used to control, protect, and isolate electrical equipment.

Switching Cubicle – A utility box that typically sits on the ground and holds a number of electrical switches and devices.

Transformer – A utility device used to change the voltage in an alternating current electrical circuit.

Trenching – A narrow, long ditch embanked with its own soil.

Vault – An underground room or contained area that houses electrical equipment.

Vertical Clearance – The distance measured vertically.

Weatherhead – The aerial entry point where open conductors enter a conduit system.

3.0

Choosing Your Connection and Common Information

3.1 IMPORTANT INFORMATION APPLICABLE TO ALL SERVICE TYPES

a. This section contains important information that applies in various ways to **all** the service types that EDTI provides. It is critical that you read and understand the following information in addition to the service specific information provided in subsequent sections of this guide.

3.2 CONNECTION PROCESS AND TIME FRAMES

a. EDTI has an easy-to-follow process available on epcor.com that describes the power connection process and the length of time it typically takes to get connected.

b. If you are looking for a Primary Metered Service, please see Section 7.1 – General Information for more information on timing. Depending on the type of connection you need, the entire process can take months or even years to complete. It's important to plan this time frame into your schedule.

Typical Project Process Flow

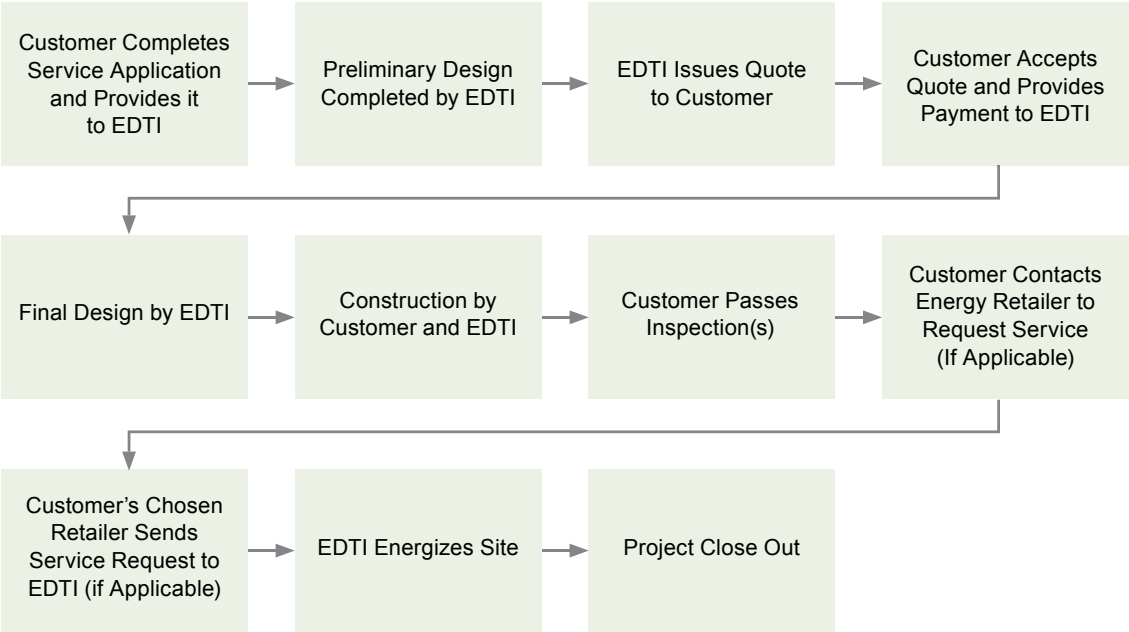

3.3. Δ APPLYING FOR SERVICE

a. Before applying for service, it is important that you gather all the information EDTI requires to start your project. To assist you, EDTI has provided Checklist 3.1 – Application Checklist.

b. The Application Checklist provides a list of requirements for each service type, except Network Services. For Network Services, anticipate the requirements will be similar to Primary Metered Service requirements. Contact us for specific requirements for your network connection.

c. A copy of the checked off checklist shall accompany your drawing package as part of your application.

d. **You are required to provide ALL the information noted on the checklist (unless it is noted as optional) as part of your application. Missing information will result in your application being rejected.**

e. Technical drawings must be submitted as PDFs **and** either AutoCad (2019 version or earlier) or Microstation files.

f. To apply for service from EDTI, please go to the Power Connection for Builders and Developers section of epcor.com/newconnection, and select Apply for Service.

3.4 PROJECT OVERVIEW

a. Table 3.1 – Project Overview provides a summary of the types of service connections EDTI provides, and outlines the Customer's and EDTI's responsibilities when completing a new connection.

3.4.1 Δ Transmission Direct Connection & Novel Services

a. With unique Customer needs and new technologies it is possible that EDTI's service connection options provided in Table 3.1 – Project Overview will not meet the Customer's situation. EDTI can provide transmission direct connections and novel service connections where it is not possible or practical to service the Customer with a standard service option. These services will be provided at EDTI's sole option, and in accordance with all relevant laws, regulations, codes, etc.

b. Such connections are unique to the particular project, and the requirements for a particular service will be defined once the need for such a service has been identified. To explore transmission direct connection and novel service options, please contact us.

3.5 Δ SELECTING THE SERVICE TYPE

a. Different Customers have different needs, and EDTI has a variety of service options to serve those needs. Table 3.2 – Service Types provides a list of the typical services EDTI provides, and the maximum limits available for those service offerings.

b. The maximum service limits specified in Table 3.2 – Service Types applies only to dedicated transformers. If multiple Customers share a transformer, limits may be reduced or alternate servicing arrangements may be required. EDTI Customer Engineering Services must confirm all services prior to construction approval. Contact us to discuss your particular servicing details.

c. Maximum service limits apply to services within our 15kV and 25kV service areas. For any new or increased services in the 5kV distribution area, contact us for limits. Refer to Drawings 3.1, 3.2, and 3.3 for the primary voltage in your area, and contact us for confirmation.

d. Two or more services of the same voltage will not be supplied to the same premises. An example would be a 120/240V, single phase, 3-wire service and a 120/208V, 3-phase, 4-wire service.

e. New or increased 240V, 3-phase, 3-wire services will only be supplied if approved by EDTI Customer Engineering Services.

   i. Existing 240V, 3-phase, 3-wire services will continue to be maintained.

   ii. Single phase equipment cannot be connected to 240V, 3-phase, 3-wire services.

f. Mutual heating can affect the number of secondary conductors required which in turn may limit your choice of service type. See the Canadian Electrical Code – Part 1 for more information on mutual heating and the relevant cable installation section of this guide for your service type, for information on the maximum number of conductors allowed.

g. When a Customer performs a lot split, provisions for all lots to be serviced at the same time shall be made. This may, in EDTI's sole option, require infrastructure (poles, lines, pedestals, transformers, cables, etc.) to be added for the other lots which are planned to be developed at a later date. No lot shall be serviced alone.

h. EDTI may in its sole option require a Customer to have a standby service. Typically, such requirements apply to critical infrastructure sites, and buildings that require additional redundancy in an emergency event. EDTI will identify this requirement to the Customer when applicable. If you believe your site may require such a service, please contact us.

3.5.1 Δ Electric Vehicle Charging – Alternatives to a Service Upgrade

a. A common reason single family residential Customers request service upgrades is to accommodate the addition of a Level 2 (208/240V) electric vehicle charger to their home.

b. This is typically the result of the Canadian Electrical Code (CEC) – Part I, Rule 8-200 load calculations exceeding the existing service capacity.

c. An alternative to a service upgrade in some cases is the use of an Electric Vehicle Energy Management System (EVEMS) as allowed for under Canadian Electrical Code – Part I, Rule 8-106(10)(11) and Rule 8-500.

d. Some known models of EVEMS certified for Canadian use include:

   i. AC Dandy, Loadmister (D-LM)

   ii. Black Box Innovations, EVEMS

   iii. DCC Electric, DCC-10

   iv. SimpleSwitch, 240 and 240M

   Consider discussing these options and other similar offerings by other manufacturers, with your electrician or consulting engineer.

3.6 Δ GENERAL SERVICE REQUIREMENTS

a. Connections and disconnections must be done by EDTI or its authorized agents.

b. Only EDTI's employees or their authorized agents can operate or maintain any electrical facilities owned by EDTI.

c. EDTI reserves the right of final approval for the location of facilities before EDTI will grant construction approval.

d. EDTI will not permit the installation of service lines crossing public property between private properties.

e. The installation of primary service cable under structures is not permitted, even when in duct.

f. EDTI will not connect any permanent or temporary service to the City of Edmonton's streetlight system.

g. EDTI installs distribution equipment on public property.

h. The Customer is responsible for the installation and maintenance of all civil work on private property, including maintaining the level of equipment. Civil work typically includes trenching, ducting, transformer or cubicle pads, ground grids, guardrails, pull boxes, and intermediate service poles. Please see Table 3.1 – Project Overview for additional details.

i. Voltage drop calculations are the Customer's responsibility and must be submitted upon request.

j. The Customer must ensure loading is balanced across all phases of the service.

k. Customers shall not take single phase 120V service off of a 3-phase 240V service.

l. Residential services are not designed for electric heating as the primary heat source. If it is to be used as the primary heat source, contact us Customer Engineering Services prior to construction. The Customer may be assessed additional costs based on the type of upgrades required.

    i. For residential single family construction, temporary electrical construction heat is permitted at 240V, with a maximum of 30A of heating per 100A of service capacity.

m. The Customer will comply with the standards set out by the Institute of Electrical and Electronics Engineers (IEEE) 519-1992 (Table 10.3, 10.4, 10.5) when loads producing harmonic distortion are involved. The Customer will also comply with the short- and long-term flicker limits as specified in Tables 2 and 6 of CAN/CSA-C61000-3-7 Electromagnetic Compatibility (EMC) – Part 3 -7.

n. The Customer must provide space and utility Rights-of-Way for utility equipment to maintain the flexibility of the power system, as required by EDTI. See Section 3.8 – Easements and Utility Right-of-Way for more information.

o. EDTI has specific servicing details for the Quarters Downtown Development area. If your development is in this area, which extends from 92 to 97 Street and from 101 to 103A Avenue, please contact us for these details.

3.7 Δ SERVICE ENTRY POINT

a. The Service Entry Point is the point at which EDTI's civil infrastructure ends and is connected to the Customer's property or civil infrastructure. In most cases, this is where the underground secondary service conductor enters the Customer's property from the public right-of-way.

b. Customers shall inform EDTI at the time of making the service application where their preferred Service Entry Point is. EDTI will review the preferred location, and determine if it can be reasonably accommodated. EDTI reserves the right to determine in its sole option where the final Service Entry Point location shall be; the Customer shall update their plans accordingly.

c. It is critical that the Customer confirm with EDTI their site-specific Service Entry Point **before beginning construction.** The Customer will be responsible for correcting any errors they make in their work, resulting in coming to the wrong point. Such errors will result in substantial delays and additional costs to the Customer's project.

3.8 Δ EASEMENTS AND UTILITY RIGHTS-OF-WAY

a. Pursuant to EDTI's Terms and Conditions, Customers shall grant, or cause to be granted, to EDTI, without cost to EDTI, such easements or rights-of-way over, upon or under the property owned or controlled by the Customer as EDTI reasonably requires for the construction, installation, maintenance, repair, and operation of the facilities required for a service connection.

b. EDTI shall determine in its sole option the best instrument to register its interest in a property.

c. Where an easement or rights-of-way is reasonably required by EDTI on another parties property for the construction, installation, maintenance, repair, and operation of the facilities required for a Customer's service connection, the Customer shall cause to be granted, to EDTI, without cost to EDTI, such easements or rights-of-way.

d. Easements or rights-of-way shall be provided for all EDTI equipment and facilities located on private property.

e. Multifamily residential services shall require a blanket easement or utility right-of-way for the entire property.

f. For typical easement/utility right-of-way requirements for transformers and cubicles, refer to the following drawings:

   i. Drawing 3.4 – Right-of-Way Requirement for Single Phase Switching Cubicle, Single Phase Transformer, or 3 Phase Transformer

   ii. Drawing 3.5 – Right-of-Way Requirement for Single Phase Switching Cubicle, Single Phase Transformer, or 3 Phase Transformer with 2.0m Gas Right-of-Way

   iii. Drawing 3.6 – Right-of-Way Requirement for 3 Phase Switching Cubicle

   iv. Drawing 3.7 – Right-of-Way Requirement for 3 Phase Switching Cubicle with 2.0m Gas Right-of-Way

   (Note: The right-of-way areas in Drawings 3.4 and 3.6 are typical of the footprint area required for the respective equipment. When this equipment is to be placed on public property, the same area requirements apply.)

3.9 DUPLEX, TRIPLEX, AND FOURPLEX UNITS

3.9.1 Δ All Units on One Lot

a. Each individual unit in a new multi-unit dwelling will be served as a separate service, unless EDTI Customer Engineering Services agrees otherwise.

b. If a homeowner's agreement is in place, one service may be installed to a common location on the building to service all the units. A final copy of which shall be provided to EDTI prior to inspection and energization.

c. Please contact us to talk about your specific situation.

3.9.2 Each Unit on Individual Lot

a. Each individual unit in a new multi-unit dwelling must be served as a separate service, unless EDTI Customer Engineering Services agrees otherwise.

b. EDTI may require additional work at the Customer's expense to ensure no trespass is created.

c. Please contact us to talk about your specific situation.

3.9.3 Δ Bare-Land Development

a. EDTI requires a blanket easement or utility right-of-way to be registered on the owner's title in EDTI's name. See Section 3.8 – Easements and Utility Rights-of-Way for more information.

3.10 Δ CLEARANCES

a. Maintaining adequate clearances of people, buildings, trees, vehicles, other utilities, and other objects, is critical for safety. It is the Customer's responsibility to ensure adequate clearance for their project is maintained at all times, including before, during, and after construction.

b. Failure to maintain clearance distances will result in stop work orders, costly and timely delays and rework, and potentially demolitions or alterations. In some instances whole buildings have needed to be moved or demolished due to clearance issues that the Customer or their contractor/consultant failed to account for. EDTI strongly recommends Customers engage professionals (architects, engineers, electricians) knowledgeable in the clearance requirements for their project.

c. Distances in this section are the clear distance between objects, unless noted otherwise.

3.10.1 Δ Limits of Approach – Clearance to Overhead and Underground Power Lines

a. It is important to be aware of any power lines in the area when planning your construction. The required clearance for overhead power lines may be as much as 7.0m.

   i. EDTI offers free consultations on construction plans where there are concerns about proximity to overhead electrical facilities. Contact us for details and assistance.

b. You must consider the proximity of planned buildings/structures and work areas during construction to power lines. Employers and contractors have responsibilities under the Alberta Occupational Health and Safety (Alberta OHS) Act, Code, and Regulations to maintain safe distances for people or equipment must maintain from energized power lines or equipment.

   i. Anyone working within 7.0m of an overhead power line shall contact an EDTI Safety Codes Officer prior to commencing any work – contact details are below.

c. You may also contact EDTI's Safety Codes Officers at safetycodes@epcor.com for assistance and additional information.

d. All costs associated with meeting the required code clearances are the owner's responsibility. If the site is deemed unsafe, a stop-work order will be issued.

e. You can get more information on building near overhead lines and learn more at the Stay Safe Around Power Equipment section of epcor.com.

3.10.2 Δ Horizontal Clearance to Other Utilities

a. The following horizontal clearances apply to the specified infrastructure on private property. Where other utility or municipality requirements are more stringent, those requirements shall apply.

3.10.2.1 Δ Poles and Anchors

a. 1.0m to all gas lines.

b. 1.8m to all water lines and cc valves.

c. 2.0m to all valves, hydrants, catch basins, manholes, vaults, sanitary and storm sewer lines, septic tanks, fields, and Minnesota Mounds. The secondary cable cannot cross through septic fields and Minnesota Mounds.

3.10.2.2 Δ Padmount Transformers, Switching Cubicles, Guardrails/Bollards, and Ground Grids

a. 1.0m to all gas lines.

b. 1.8m to all water lines and cc valves.

c. 2.0m to all valves, hydrants, catch basins, manholes, vaults, sanitary and storm sewer lines, septic tanks, fields, and Minnesota Mounds. The secondary cable cannot cross through septic fields and Minnesota Mounds.

3.10.2.3 Δ Primary Conductors

a. 1.0m to all gas lines.

b. 1.8m to all water lines and cc valves.

c. 2.0m to all valves, hydrants, catch basins, manholes, vaults, sanitary and storm sewer lines, septic tanks, fields, and Minnesota Mounds. The secondary cable cannot cross through septic fields and Minnesota Mounds.

3.10.2.4 Δ Secondary Conductors

a. 1.0m to all gas lines.

b. 1.8m to all water lines and cc valves.

c. 2.0m to all valves, hydrants, catch basins, manholes, vaults, sanitary and storm sewer lines, septic tanks, fields, and Minnesota Mounds. The secondary cable cannot cross through septic fields and Minnesota Mounds.

3.10.2.4.1 Single-Family and Multi-Family Unit Four-Party Trench Exception

a. On residential properties where a four-party joint-use trench is used, there must be a minimum 0.3m separation to the gas line in the four-party trench, and a marker tape must be installed 0.5m above the service cable.

3.10.3 Δ EDTI Clearance Requirements for Landscaping & Structures

a. It is the Customer's responsibility to ensure that any trees, shrubs, buildings/structures, driveways, sidewalks, fences, or other landscaping on their property does not pose a risk to or interfere with the utility lines and equipment.

b. Where Customers have installed any of the above items, EDTI may remove them at the owner's expense, pursuant to EDTI's Terms and Conditions, and all applicable laws and regulations.

   i. While EDTI prohibits the installation of any hard surface materials (e.g. concrete, asphalt) within the clearance distance of its assets, EDTI strongly recommends that a cold joint be installed along the clearance boundary to allow for the easy removal of any material installed in the clearance area. EDTI will not be held responsible for damages to the material adjacent to the clearance area when removals are required. Cold joints will ease the material removal within the clearance area, reducing potential costs borne by the Customer, and reduce the risk of the adjacent material from being damaged.

c. The clearance requirements in this section are EDTI's general minimum clearance requirements. Other codes, regulations, bylaws, or laws may have more stringent requirements. It is the Customer's responsibility to determine what requirements apply, and to adhere to the most stringent of those requirements.

d. Before planting new trees, look overhead and all around the intended site. Note how far the tree planting site is from overhead utility lines and the easement/utility right-of-way; select trees that won't interfere with utility lines. Consider the expected final growth size (height and breadth) of the species being planted.

e. Ensure any landscaping and buildings/structures near power equipment meets proper clearances. EDTI requires the following clearances (the most stringent shall apply):

   i. Power Poles and Anchors: 1.0m on all sides

   ii. Aerial Lines: 3.0m

   iii. Transformers: 3.0m in front of doors, 2.0m on other sides

   iv. Switching Cubicles: 3.0m on all sides

   v. Pedestals: 1.0m on all sides

   vi. Ground Grids: 1.0m

   vii. Guardrails and Bollards (including concrete): 1.0m

f. Customer shall provide an appropriate stable landscaping surface within the clearance area of EDTI equipment. Examples of appropriate landscaping are sod, wood chips (4 in. or smaller) or decorative crushed rock. Any decorative crushed rock shall be 20mm (¾ in.) or smaller, with a minimum of three fractured faces. Smooth, rounded rocks are not permitted. Concrete & asphalt are not permitted within the guardrail area to allow for access to grounding for maintenance and repair.

g. Where the transformer is to be installed in an alcove, the size of the alcove required depends on the size of the transformer and the setback distance of the transformer. The transformer shall comply to all the clearance requirements above, and shall comply with Drawing 3.8 – Typical Transformer Alcove Layout**.** Please talk to EDTI Customer Engineering Services for exact requirements for your project.

h. Prior to starting work on your project, any obstructions of EDTI's equipment will need to be rectified at the Customer's expense.

i. For more information on the clearance requirements for landscaping and how to safely trim trees that are too close to power lines, visit epcor.com.

3.11 Δ RESIDENTIAL GROUND ELECTRODES

a. This section's requirements apply to all new residential dwellings (single family detached, semi-detached, and row housing).

b. Ground electrodes shall be:

i. **Option #1 – Lot Adjacent to Meter Developed**
Where the development of the adjacent lot on the meter side of the house has been completed, the ground plate may be buried outside at a minimum depth of 600mm, at a minimum 1,000mm to either side of the meter location. The ground plate shall remain exposed for inspection.

ii. **Option #2 – Lot Adjacent to Meter Not Developed**
Where the development of the adjacent lot on the meter side of the house has not been completed, another suitable location such as the rear of the foundation shall be used, with the ground plate buried at a minimum depth of 600mm. The ground plate shall remain exposed for inspection.

iii. **Option #3 – Ground Plate in Basement**
Where the installation of the ground plate is installed inside the basement, it shall be at a minimum depth of 600mm below the surface of the basement slab, at a minimum 1,000mm to either side of the panel location. The ground plate shall be ¾ backfilled, leaving the termination end and ¼ of the plate exposed for inspection.

(NOTE: The backfilling of the plate electrodes above shall be with native soil, free of large lumps, sand and rock.)

iv. **Option #4 – Ground Conductor in Footing**
Install not less than 6m of copper, sized according to Table 43 of the Canadian Electrical Code – Part I, encased within the bottom 50mm of a concrete foundation footing in direct contact with the earth, at not less than 600mm below finished grade. This will require an inspection at the time of installation with an additional inspection fee attached.

3.12 TRENCHING AND BACKFILLING

a. Under no circumstances shall energized primary cables be moved or handled in any way.

b. All proposed cable routing and duct work is subject to written approval by EDTI Customer Engineering Services before construction approval.

c. The trench must take the most direct route to the meter base location.

d. As a Customer, you cannot do any excavation work on City of Edmonton property, but you must complete all trenching on your property.

e. Underground service lines must be kept a minimum of 1.0m from the edge of the property line.

f. The Customer's contractor must not trench within 1.0m of any EDTI power pole, anchor, transformer, switching cubicle ground grid (extends underground 2.0m from the edge of the concrete base, and 300mm of the guard rail, whichever is further from the concrete base), power pedestal, or energized cable without prior consultation with EDTI.

g. Some work may be required above energized primary or secondary cables. This may involve crossing or over trenching the cables. Mechanical excavation is allowed up to 1.0m from the energized facilities. The facilities must first be located using hydro excavation (hydrovac) or hand digging before determining where the mechanical excavation limits end.

h. EDTI Customer Engineering Services will allow a contractor to over trench up to 5.0m of energized facilities by hand or hydro excavation (hydrovac). Follow Utility Safety Partners (formerly Alberta One-Call) procedures and contact us before starting work.

i. EDTI facilities must be located using hydro excavating or hand digging before determining where the mechanical excavation limits end.

j. Exposed energized cables cannot be left unattended. If the excavation is narrow or small, the primary cable must be covered with soil bags or some other suitable temporary method. Contact us for more details**.**

k. Ensure that the top of the duct is a minimum of 1.0m to a maximum of 1.3m below final grade and that the service duct is set on undisturbed soil that is free from rocks, debris, and sudden grade changes.

l. If large lumps of clay and soil have hardened due to drying or freezing, and when a backhoe has been used for electrical service installation, a 150mm layer of sand must be placed below the cable.

m. For all service installations, a 300mm layer of sand must be placed above the cable.

n. When a trench has been backhoed, cables must be shaded with 300mm of sand. Backhoed material cannot be placed over cable.

o. A marker tape must be installed 500mm above all underground electrical conductors.

p. The Customer must backfill all trenches with material that is free of stones and items with sharp edges.

q. Backfill must be placed in uniform lifts not exceeding 300mm and compacted to the City of Edmonton Design and Construction Standards, Volume 2 – Roadways.

r. All compaction testing shall meet a minimum of 98% of Standard Proctor Density (SPD).

s. Backfill material over cable can be the material trenched with a mechanical trencher, if the inspector deems it suitable. Soil with high thermal resistivity that contains large amounts of organics, peat, black loam, sod, hardened clay, stones, straw, snow, or frozen material will not be acceptable. All backfill material is subject to the inspector's approval. Sand or clean backfill material must be substituted for unsuitable backfill.

3.12.1 Hydro Excavating (Hydrovac) Procedure Over Primary and Secondary Cables on Private Property

a. Always follow updated EDTI hydro excavating standards (i.e. water temperature, water pressure limits, and neoprene oscillating head). The hydro excavating operator must be familiar with this specific standard before starting work to avoid damage to the cable or exposure to an electrical hazard. A copy of the updated standard must be on-site and made available to EDTI upon request. Contact us for updated standards.

3.13 MAIN SWITCH OR BREAKER MINIMUM INTERRUPTING CAPACITY

a. Due to higher fault levels, services supplied from the network system require larger interrupting capacities. Please see Section 8 – Network Service for more information.

b. The interrupting capacity of main switches and breakers must be sized according to Table 3.3 – Main Switch or Breaker Minimum Interrupting Capacity.

c. The minimum interrupting capacity applies to all service entrance equipment.

d. The interrupting capacities indicated are for one service from one matching transformer. When a larger transformer is installed to service several temporary or permanent main panels, the interrupting capacity must match the total capacity of all main services connected to the transformer. Contact us to confirm the requirements.

e. For temporary services supplied from a permanent transformer, interrupting ratings must match the available fault currents at the transformer. Confirm the rating with an EDTI Customer Engineering Services representative.

3.13.1 Making Changes to Customer Main Breaker or Fusing

a. Customers shall not alter their main disconnect fusing or breaker protection settings without prior written consent from EDTI.

3.14 Δ ELECTRICAL ROOM

a. If service capacity exceeds 200A, or the sum total of multiple services exceed 200A, service equipment must be located in a separate electrical room of adequate size, when in a building. The electrical room can only contain electrical and/or communication equipment and must not contain mechanical devices, including gas or water equipment. If an electrical room is provided for services 200A or less, the same requirements apply.

   i. Electrical rooms are not required for individual residential dwelling units.

b. A detail of the electrical room layout must be submitted for EDTI approval.

   i. The electrical room of adequate size, or in a location that is acceptable to EDTI and the inspection authority.

   ii. There shall be no less than 900mm clearance for egress, with all man and equipment doors open.

   iii. Door swings and egress clearances shall be provided to EDTI as part of the electrical room drawings.

c. All electrical rooms must have four walls and a ceiling.

d. The key(s) required to access the electrical room must be provided to the EDTI Meter Operations department.

e. Electrical rooms must be located on ground floors, unless a written variance from EDTI has been provided. See Section 1.6 – Variances for details. If a variance is provided, the following requirements apply.

   i. If an electrical room is located on a floor other than the ground floor, it must be accessible by a proper stairway as defined in the Alberta Building Code. Please refer to the building code for “private” or “public” stair types. For example, the maximum rise is 200mm, the minimum run is 210mm, the tread depth is a minimum of 235mm, and the width is 900mm. Access by a ladder is not acceptable.

   ii. If the main electrical room and all revenue meter sockets are to be located below grade. The site will require a line side wired/powered 120V meter socket installed in a suitable (Utility Power Meter Foreman approved) above grade location inside the building. This meter socket should have a blank cover and be labelled “POWER UTILITY USE ONLY”. The location must be accessible to EPCOR for future use. The location and approval shall be noted in the inspection report. See Drawing 10.4 – Instrument Transformer Metering Layout for additional details.

f. EDTI has specific servicing details for the Quarters Downtown Development area. If your development is in this area, which extends from 92 to 97 Street and from 101 to 103A Avenue, please contact us for these details.

3.15 Δ MAXIMUM HORSEPOWER OF MOTORS

a. The maximum permitted horsepower of motors is identified in Table 3.4 – Maximum Horsepower of Motors Permitted. Variable frequency drives and motors employing motor soft starters may be exempt from these limits – please contact us to discuss your specific requirements.

b. Special permission is required before EDTI will grant construction approval for motors larger than those specified in Table 3.4. Please contact us for more information.

3.16 EQUIPMENT ACCESS

a. EDTI Customer Engineering Services reserves the right of final approval for the location of facilities prior to construction.

b. EDTI requires truck access to on-property transformers, switching cubicles, poles, and pull boxes.

c. Access to equipment must be provided on private property. Without special permission from EDTI Customer Engineering Services, public roadways or laneways are not acceptable for access to equipment on private property.

d. Equipment must be placed beside a 4.6m wide access roadway that is centred in an unimpeded 6.5m wide area. The area must be capable of supporting an 18,000kg truck, plus equipment weighing up to 6,900kg. Equipment must be unloaded from the side of the vehicle, with outriggers on the truck extending to a width of 7.0m.

e. Any overhang or other obstruction over the access roadway must have a minimum of 5.0m of vertical clearance.

f. If access is through a locked enclosure, the Customer shall provide double lock capability on the gate to accommodate an EDTI lock.

g. Padmounted equipment must be placed in a location not to exceed maximum setbacks from driving surfaces as outlined in Table 3.5 – Maximum Setback Distances for Padmount Equipment.

h. Equipment must be placed in a location where it will not create a line-of-sight concern for traffic or pedestrians.

i. See Section 3.10.3 – EDTI Clearance Requirements for Landscaping & Structures for details on transformer alcoves.

3.17 SITE HOUSEKEEPING

a. Areas that our crews must access and work in must be clear of construction materials, equipment, debris, trash, and other materials that may impede work, pose a safety risk to personnel, or damage equipment.

b. The site must be level and consist of hard-packed material or asphalt.

c. If a site has substandard housekeeping or is deemed unsafe by EDTI personnel, EDTI personnel will leave the site until the issues are rectified.

3.18 SERVICE INTERRUPTIONS

a. While EDTI takes all reasonable efforts to guard against interruptions, we do not guarantee uninterrupted service.

b. Without liability of any kind to EDTI, EDTI has the right to disconnect or otherwise curtail, interrupt, or reduce Distribution Tariff Service to Customers whenever EDTI reasonably determines, or is told by the Alberta Electric System Operator, that such a disconnection, curtailment, interruption, or reduction is necessary:

   i. To facilitate construction, installation, maintenance, repair, replacement, or inspection of any of EDTI's facilities.

   ii. To maintain the safety and reliability of EDTI's distribution system.

   iii. For any other reason, including dangerous or hazardous circumstances such as emergencies, forced outages, potential overloading of EDTI's distribution system, or force majeure.

3.19 SERVICE CONNECTION AGREEMENTS

3.19.1 Offer Letter & Capital Contribution

a. EDTI requires the Customer to sign the Customer Acceptance portion of the estimate letter as confirmation of intent to proceed with construction. This is required before EDTI finalizes the design and issues work orders.

b. The Customer may be required to make a capital contribution toward the cost of materials and equipment installed on City of Edmonton property or the Customer's property. This shall be paid in full prior to EDTI finalizing the design and issuing any work orders.

3.19.2 Δ Electric Service Agreement (Schedule B and Schedule C)

a. Customers may be required to sign an Electric Service Agreement as defined and required by EDTI's Terms and Conditions for Distribution Connection Services. These agreements are sometimes referred to as a 'Schedule B' or 'Schedule C'. EDTI will not be able to complete the service until these documents are signed by the Customer, if required.

3.19.3 Δ Design and Planning Service Agreement

a. EDTI may at its sole option require the Customer to sign an Engineering Service Agreement, and pay a deposit, or provide a security or letter of credit, for the estimated value of engineering services to complete the preliminary design and estimate for the services the Customer is requesting.

b. Additional increases to the deposit, security, or letter of credit may be required, if the costs of completing the engineering work exceed the initial deposit amount. EDTI may in its sole option cease work until these requirements are met in full.

3.19.4 Δ Construction Commitment Agreement

a. EDTI may at its sole option require the Customer to sign a Construction Commitment Agreement, and pay a deposit, security, or letter of credit, for the estimated value of construction to complete the service the Customer is requesting.

b. Additional increases to the deposit, or security or letter of credit may be required, if the costs of completing the construction work exceed the initial deposit amount. EDTI may in its sole option cease work until these requirements are met in full.

3.19.5 Δ Distribution Interconnection Agreement

a. EDTI may at its sole option require the Customer to sign a Distribution Interconnection Agreement that outlines the specific requirements for the service connection the Customer has requested, above the requirements outlined in EDTI's Terms and Conditions. These agreements are common where large generators are being installed, make-before-break transfer schemes are being employed, or where Customer equipment or operating practices are of concern to EDTI.

3.20 PERMITS AND INSPECTIONS

a. As a Customer, you or your contractors are responsible for:

   i. Obtaining all permits, certificates, licenses, inspections, reports, and other authorizations necessary for installing and operating the service connection. EDTI is not required to start or continue operation of a service connection unless the Customer has complied with the licensing requirements of EDTI and all other authorities.

   ii. Submitting an electronic copy of the electrical wiring permit, civil electrical inspection, and final electrical inspection report to EDTI Customer Engineering Services.

   iii. Ensuring that an Electrical Safety Codes Officer inspects all internal wiring before it's concealed. All transformer and switching cubicles, ground grids, underground wiring, and ducts must be inspected before the trench is backfilled. Contact the City of Edmonton to arrange for inspections. A service connection will not be energized unless you have inspection approval.

   iv. Completing utility searches on private property and notifying Utility Safety Partners (formerly Alberta One-Call) before any work is done.

3.21 METERING AND CHOOSING YOUR RETAILER

a. Please see Section 10 – Metering to determine the metering requirements, and to determine the type of metering required for your installation.

b. You are free to choose any retailer. Regulated wires services do not depend on the retailer you choose. For a listing of licensed Alberta retailers, visit ucahelps.alberta.ca or call 310-4822 (toll-free in Alberta).

TABLE 3.1

Δ PROJECT OVERVIEW

Point of Service is more particularly described in EDTI's Distribution Asset Ownership Guide.

CONNECTION	CUSTOMER'S RESPONSIBILITIES	EDTI'S RESPONSIBILITIES	SERVICE ENTRY POINT (CIVIL INFRASTRUCTURE CONNECTION POINT)	POINT OF SERVICE (ELECTRICAL CONNECTION POINT)
AERIAL SECONDARY SERVICE This is an overhead service run from a power pole. Typical installations include homes and small commercial applications.	Complete all work on the building, including installation of the weatherhead and service attachment. Install and maintain all intermediate poles and associated hardware, including racks, anchors, and downhauls with only secondary conductors attached. Install Current Transformers and Potential Transformers.	Complete all work on public property. Supply and install overhead secondary conductors and make the final connection at the transformer and weatherhead. Supply, install, and maintain all high-voltage utility equipment, including conductors, transformers, and switches. Install and maintain all intermediate poles, anchors, and downhauls with high-voltage (primary) conductors attached on the line side of the point of service. Supply Current Transformers and Potential Transformers. Supply and install revenue metering equipment.	Weatherhead on the building.	Weatherhead on the building.
Δ UNDERGROUND SECONDARY SERVICE This is a secondary underground service fed from an existing transformer, new transformer, or pedestal installed on City of Edmonton property. Typical installations include homes and small to medium commercial applications.	Complete civil work on private property. This typically includes all trenching, ducting, pull boxes, and grounding. Supply secondary service cable, except for non-MFU residential sites. Install secondary cable. Install Current Transformers and Potential Transformers.	Complete all work on public property. Terminate all secondary conductors at the transformer or pedestal. For non-MFU residential sites, supply secondary service cable from transformer/pedestal to service entry point, plus 30.0m (coiled for Customer to install). Additional cable at Customer's cost. Supply Current Transformers and Potential Transformers. Supply and install revenue metering equipment.	Property line.	Splice at property line if present, otherwise line side meter socket lugs.

TABLE 3.1 – CONTINUED

Δ PROJECT OVERVIEW

CONNECTION	CUSTOMER'S RESPONSIBILITIES	EDTI'S RESPONSIBILITIES	SERVICE ENTRY POINT (CIVIL INFRASTRUCTURE CONNECTION POINT)	POINT OF SERVICE (ELECTRICAL CONNECTION POINT)
Δ PADMOUNT TRANSFORMER SERVICE This is a ground-mounted transformer located on private property. Typical installations include medium to large commercial applications, large houses, and multifamily sites.	Complete civil work on private property. This typically includes all trenching, ducting, pull boxes, concrete bases for any padmount equipment, grounding, and guardrails. Supply the primary cable on multi-family sites. Supply and install secondary cable. Install Current Transformers and Potential Transformers.	Complete all work on public property. Supply primary cable, except for multi family sites where the Customer supplies the primary cable. Supply, install, and terminate all padmount equipment. Supply Current Transformers and Potential Transformers. Supply and install revenue metering equipment.	Secondary duct 1.0m from the edge of transformer pad.	Transformer secondary bus.
Δ PRIMARY METERED SERVICE (AERIAL) This is an overhead service above 750V phase-to-phase. Typical installations include very large commercial applications where the demand load will exceed 2,500kVA to one building, an industrial lot with a single Customer, or a commercial lot with a single Customer.	Install all poles, anchors, and wire on the load side of the service entry point, and for the service entry point, if required.	Install poles, anchors, and wire on the line side of the service entry point. Supply and install Current Transformers and Potential Transformers. Supply and install revenue metering equipment.	First post or physical point of connection on Customer's property.	Line side lugs of the main disconnect.

TABLE 3.1 – CONTINUED

Δ PROJECT OVERVIEW

CONNECTION	CUSTOMER'S RESPONSIBILITIES	EDTI'S RESPONSIBILITIES	SERVICE ENTRY POINT (CIVIL INFRASTRUCTURE CONNECTION POINT)	POINT OF SERVICE (ELECTRICAL CONNECTION POINT)
Δ PRIMARY METERED SERVICE (UNDERGROUND) This is an underground service above 750V phase-to-phase. Typical installations include very large commercial applications where the demand load will exceed 2,500kVA to one building, an industrial lot with a single Customer, or a commercial lot with a single Customer.	Complete civil work on private property. This typically includes all trenching, ducting, pull boxes, concrete bases for any padmount equipment, grounding, and guardrails. Install Current Transformers and Potential Transformers.	Complete all work on public property. Supply and install primary cable to the line side of the main switchgear. Terminate EDTI primary cable at the Customer's switchgear. Supply Current Transformers and Potential Transformers. Supply and install revenue metering equipment.	Property line.	Line side lugs of the (switchgear) main disconnect.
Δ NETWORK SERVICE This is a 120/208V or 347/600V service located in the network area with the transformer connected to EDTI's network system. The network area extends from 97 to 110 Street and from 97 to 104A Avenue in downtown Edmonton. Typical installations include medium to large commercial applications.	Complete civil work on private property. This typically includes all trenching and ducts. Install Current Transformers and Potential Transformers. The Customer maintains all secondary ducts on private property.	Complete all work on public property. Supply and install secondary conductors and make the final connection at the transformer or ring bus and the Customer's switchgear. Supply Current Transformers and Potential Transformers. Supply and install revenue metering equipment.	Property line.	Switchgear.

TABLE 3.1 – CONTINUED

Δ PROJECT OVERVIEW

CONNECTION	CUSTOMER'S RESPONSIBILITIES	EDTI'S RESPONSIBILITIES	SERVICE ENTRY POINT (CIVIL INFRASTRUCTURE CONNECTION POINT)	POINT OF SERVICE (ELECTRICAL CONNECTION POINT)
Δ UNMETERED SERVICE This is an unmetered service only available to the City of Edmonton, telecommunication and utility companies; where in EDTI's sole option, it is not practical to provide a metered service. Typical installations include streetlights and traffic signals.	Complete trenching, ducting, and grounding. Supply and install secondary cable up to the EDTI agreed-upon demarcation point. For installations installed by EPCOR or one of its designated agents, please reference the Transportation Electrical Systems Asset Definition Agreement.	Supply and install required transformers, poles, and other equipment on public property.	EDTI agreed-upon demarcation point.	EDTI agreed-upon demarcation point.

TABLE 3.2

Δ SERVICE TYPES

	COMMERCIAL SERVICE LIMITS	RESIDENTIAL SERVICE LIMITS
Δ AERIAL SECONDARY SERVICE An overhead service run from a power pole. Typical installations include homes and small commercial applications.	• 120/240V, 1-Ph, 3-W – 400A • 120/208V, 3-Ph, 4-W – 400A • 277/480V, 3-Ph, 4-W – 150A (Temporary Services Only) • 347/600V, 3-Ph, 4-W – 150A	• 120/240V, 1-Ph, 3-W – 400A ◦ Typical services sizes include: 100A, 125A, 150A, 200A *Note: Services larger than 200A by variance approval only.*
Δ UNDERGROUND SECONDARY A secondary underground service fed from an existing transformer, new transformer, or pedestal installed on City of Edmonton property. Typical installations include homes and small to medium commercial applications.	**Pad-Mounted Transformer** • 120/240V, 1-Ph, 3-W – 600A • 120/208V, 3-Ph, 4-W – 2,800A • 277/480V, 3-Ph, 4-W – 2,200A (Temporary Service and Level 3 EV Charging on Public Property Services Only) • 347/600V, 3-Ph, 4-W – 2,400A **Pole-Mounted Transformer** • 120/240V, 1-Ph, 3-W – 400A • 120/208V, 3-Ph, 4-W – 400A • 277/480V, 3-Ph, 4-W – 150A (Temporary Services Only) • 347/600V, 3-Ph, 4-W – 150A	• 120/240V, 1-Ph, 3-W – 600A ◦ Typical services sizes include: 100A, 125A, 150A, 200A *Note: Services larger than 200A by variance approval only.*
Δ PADMOUNT TRANSFORMER A ground-mounted transformer located on private property. Typical installations include medium to large commercial applications, large houses, and multi-family sites.	• 120/240V, 1-Ph, 3-W – 600A • 120/208V, 3-Ph, 4-W – 2,800A • 277/480V, 3-Ph, 4-W – 2,200A (Temporary Services Only and Level 3 EV Charging on Public Property Services Only) • 347/600V, 3-Ph, 4-W – 2,400A	• 120/240V, 1-Ph, 3-W – 600A ◦ Typical services sizes include: 100A, 125A, 150A, 200A *Note: Services larger than 200 A by variance approval only.*
Δ NETWORK A 120/208V or 347/600V service connected to EDTI's network system The network area extends from 97 to 110 Street and from 97 to 104A Avenue in downtown Edmonton. Typical installations include medium to large commercial applications.	• 120/208V, 3-Ph 4-W – 3,000A • 120/208V, 2-Ph, 3-W – 100A • 347/600V, 3-Ph, 4-W – 1,600A *Note: Please contact us for confirmation of the network voltage and amperage available in your area.*	• 120/208V, 2-Ph, 3-W – 100A *Note: Please contact us for confirmation of the network voltage and amperage available in your area.*

TABLE 3.2 - CONTINUED

Δ SERVICE TYPES

	COMMERCIAL SERVICE LIMITS	RESIDENTIAL SERVICE LIMITS
PRIMARY METERED A service above 600V phase-to-phase. Typical installations include very large commercial applications where the demand load will exceed 2,500kVA to one building, an industrial lot with one Customer, or a commercial lot with one Customer.	The service size allowed is governed by many factors. Please **contact us** for availability.	
Δ UNMETERED This is an unmetered service only available to the City of Edmonton, telecommunication and utility companies; where in EDTI's sole option, it is not practical to provide a metered service. Typical installations include streetlights and traffic signals.	• 120/240V, 1-Ph, 3-W • 120/208V, 3-Ph, 4-W • 120/208V, 2-Ph, 3-W ****NOTE: The actual demand load for ALL unmetered services must be less than 60A.*	Not Available.

TABLE 3.3

MAIN SWITCH OR BREAKER MINIMUM INTERRUPTING CAPACITY

PRIMARY SERVICES

Interrupting capacities for primary breakers and power fuses are:

- 4.16kV System: Capacity provided on request.
- 13.8kV System: Up to 31,000A (750MVA)
- 25kV System: 12,000A (500MVA)

SECONDARY SERVICES

For services connected to EDTI's Downtown Secondary Network, please see Table 8.1 – Main Switch or Breaker Minimum Interrupting Capacity – Downtown Secondary Network Services.

	INTERRUPTING CAPACITY			
MAIN SWITCH OR BREAKER SIZE	120/240V SINGLE-PHASE, 3-WIRE	120/208V 3-PHASE, 4-WIRE	277/480V 3-PHASE, 4-WIRE	347/600V 3-PHASE, 4-WIRE
Up to 200A	10,000A	25,000A	22,000A	14,000A
201 - 600A	25,000A	42,000A	30,000A	22,000A
601 - 800A	-	42,000A	30,000A	22,000A
801 - 1,200A	-	65,000A	50,000A	25,000A
1,201 - 2,000A	-	65,000A	50,000A	42,000A
2,001 - 3,000A	-	85,000A	60,000A	48,000A

All the current ratings specified in this table are root-mean-square (RMS) symmetrical values. The minimum interrupting capacity must apply to all components and to the assembly.

TABLE 3.4

MAXIMUM HORSEPOWER OF MOTORS PERMITTED

RATING OF MAIN SERVICE CONDUCTORS	208Y VOLTS	240 VOLTS 3-PHASE	480Y VOLTS	600Y VOLTS
100A	10	10	25	30
200A	20	20	50	50
300A	30	30	75	100
400A	40	40	100	125
600A	60	*	150	200
800A	75	*	200	200
1,200A	100	*	200	200
1,600A	125	*	200	200
2,000A	150	*	200	200

* Special permission is required before EDTI will grant construction approval for motors larger than those indicated in the table. Please contact EDTI Customer Engineering Services for more information.

TABLE 3.5

MAXIMUM SETBACK DISTANCES FOR PADMOUNT EQUIPMENT

TRANSFORMERS

MAXIMUM DISTANCE BETWEEN THE DRIVING SURFACE AND THE NEAREST EDGE OF THE TRANSFORMER BASE	SERVICE SIZE			
	SINGLE PHASE 3-WIRE 120/240 VOLT	3-PHASE 4-WIRE 208Y/120 VOLT	3-PHASE 4-WIRE 480Y/277 VOLT	3-PHASE 4-WIRE 600Y/347 VOLT
9.0m	All	Up to 400A	Up to 200A	Up to 100A
7.0m		Up to 1,000A	Up to 400A	Up to 200A
5.0m		Up to 1,600A	Up to 600A	Up to 600A
3.0m		Up to 2,000A	Up to 1,000A	Up to 1,200A
2.0m		Up to 3,000A	Up to 3,000A	Up to 3,000A

- Multiple services – Contact EDTI Customer Engineering Services for applicable setback distances
- Distances specified are applicable to roadway/parking lot installations only.
- For alcove installations, reference Drawing 3.8 – Typical Transformer Alcove Layout and contact us Customer Engineering Services for applicable setback/vehicle clearance distances.

CUBICLES

MAXIMUM DISTANCE BETWEEN THE DRIVING SURFACE AND THE NEAREST EDGE OF THE SWITCHING CUBICLE BASE	SWITCHING CUBICLE
9.0m	All except automated cubicles

- Distances specified are applicable to roadway/parking lot installations only.
- Contact EDTI Customer Engineering Services for setback distances for automated cubicles.

DRAWING 3.1

EPCOR PRIMARY VOLTAGE SERVICE AREAS – 15kV, 25kV, AND DOWNTOWN NETWORK

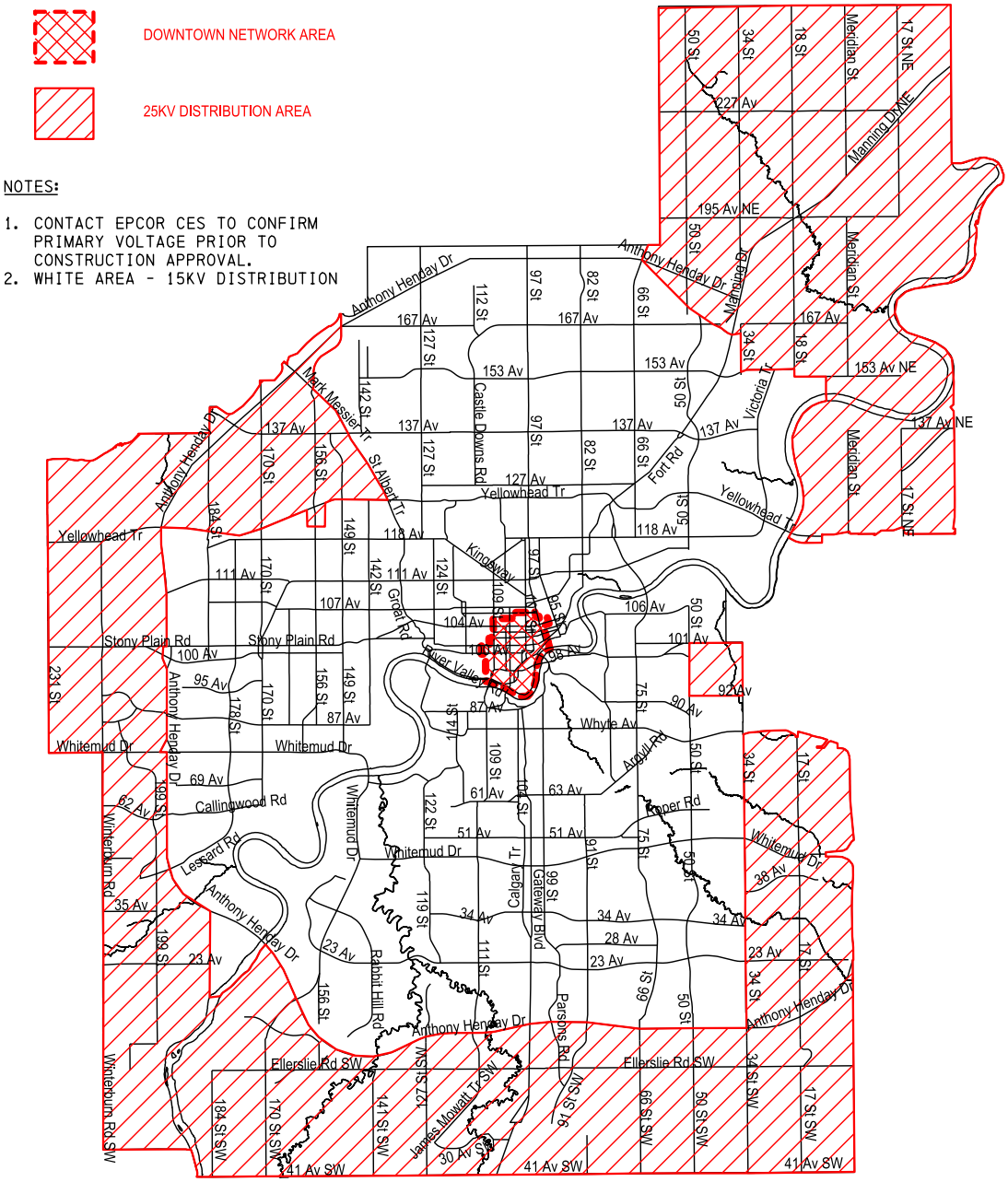

DRAWING 3.2

EPCOR PRIMARY VOLTAGE SERVICE AREAS – DOWNTOWN NETWORK (DETAILED)

DOWNTOWN ENGINEERING - BOUNDRY

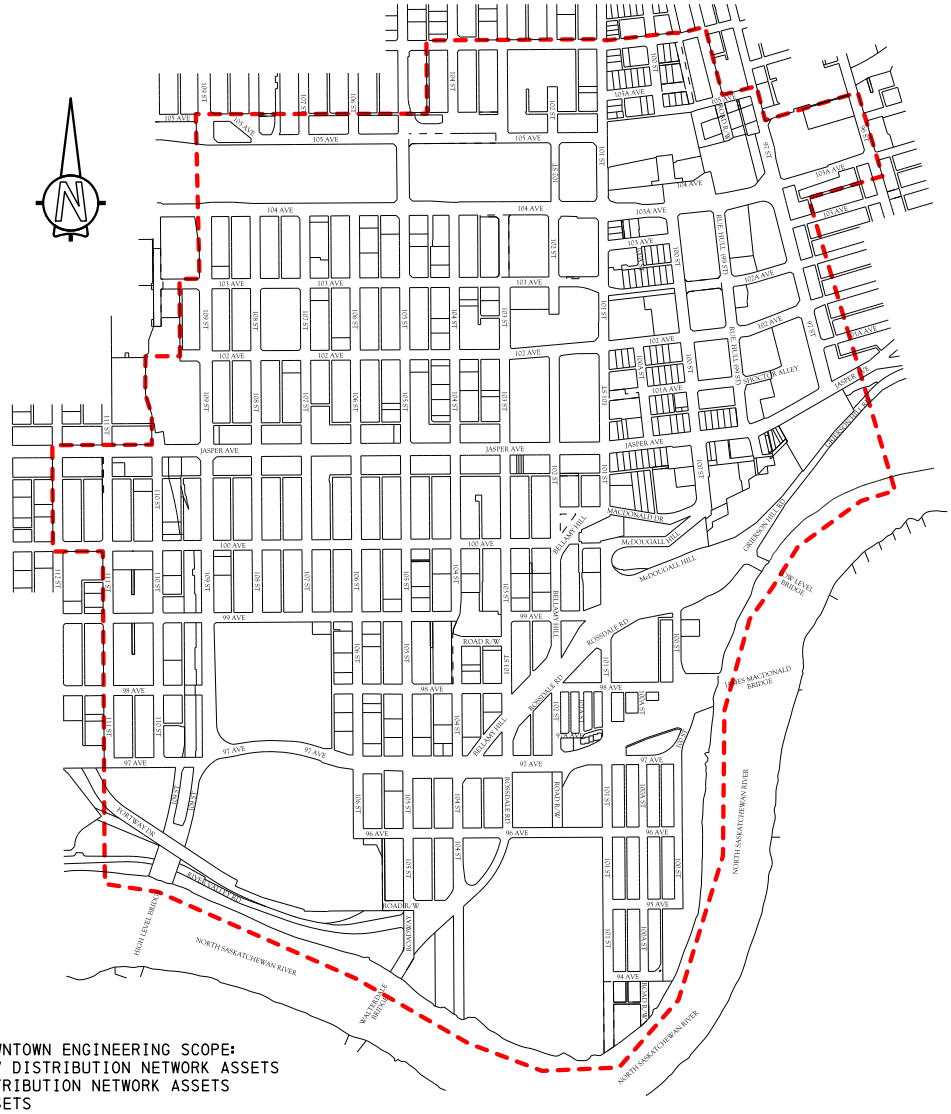

NOTES:

INCLUDED IN DOWNTOWN ENGINEERING SCOPE:
- ALL 120V/208V DISTRIBUTION NETWORK ASSETS
- ALL 600V DISTRIBUTION NETWORK ASSETS
- ALL UD144 ASSETS
- ALL NETWORK AND NON-NETWORK PRIMARY CABLES AND DUCTBANKS WITHIN THE BOUNDARY
- ALL NETWORK FED SECONDARY AERIAL LINES

EXCLUDED FROM DOWNTOWN ENGINEERING SCOPE:
- ALL NON-NETWORK PRIMARY FED AERIAL LINES
- NON UD144 UNDERGROUND DISTRIBUTION THAT CROSSES OR IS WITHIN THE DOWNTOWN BOUNDARY AREA

NOTES:
1. ALL DISTRIBUTION ENGINEERING GROUPS (CES, FRANCHISE, CAPITAL, ASSET MANAGEMENT) SHALL CONSULT WITH DOWNTOWN ENGINEERING FOR ANY PROJECTS THAT ENCROACH WITHIN THE DOWNTOWN BOUNDARY
2. ALL NEW CUSTOMER SERVICE AND SERVICE UPGRADE PROJECTS WITHIN THE BOUNDARY ARE INITIATED THROUGH C.E.S.

DRAWING 3.3

EPCOR PRIMARY VOLTAGE SERVICE AREAS – 5kV

5 kV DISTRIBUTION AREAS

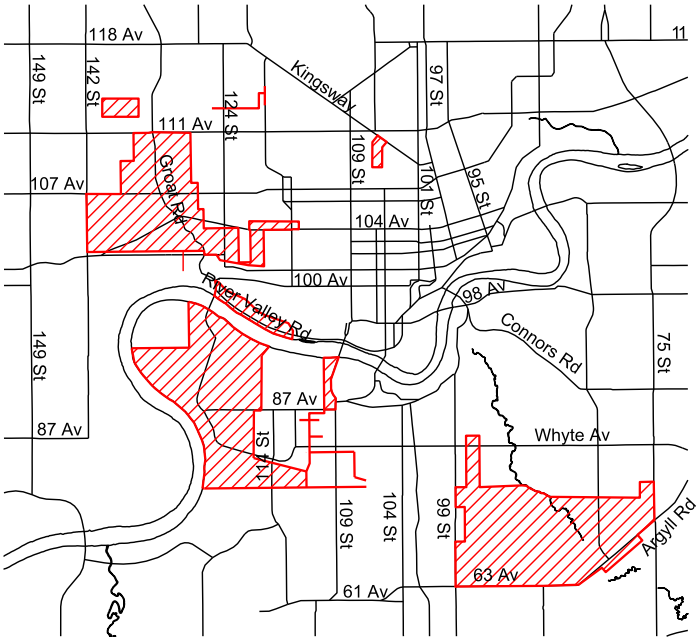

5KV DISTRIBUTION AREA

NOTES:

1. CONTACT EPCOR CES TO CONFIRM PRIMARY VOLTAGE PRIOR TO CONSTRUCTION APPROVAL
2. PRIMARY METERED SERVICES ARE NOT AVAILABLE IN THE 5KV DISTRIBUTION AREA. CONVERSION TO 15KV WILL BE REQUIRED.
3. IN THE 5KV SERVICE AREA TRANSFORMERS WITH INTERNAL CURRENT LIMITING PROTECTION MAY NOT BE AVAILABLE. THEREFORE, AS MUCH AS 6.0m CLEARANCE MAY BE REQUIRED BETWEEN TRANSFORMERS AND BUILDINGS AS PER CEC 26-242. PLEASE CONTACT EDTI CUSTOMER ENGINEERING SERVICES FOR TRANSFORMER AVAILABILITY

DRAWING 3.4

Δ RIGHT-OF-WAY REQUIREMENT FOR SINGLE PHASE SWITCHING CUBICLE, SINGLE PHASE TRANSFORMER, OR 3 PHASE TRANSFORMER

4.8 m X 4.6 m RIGHT-OF-WAY REQUIREMENT

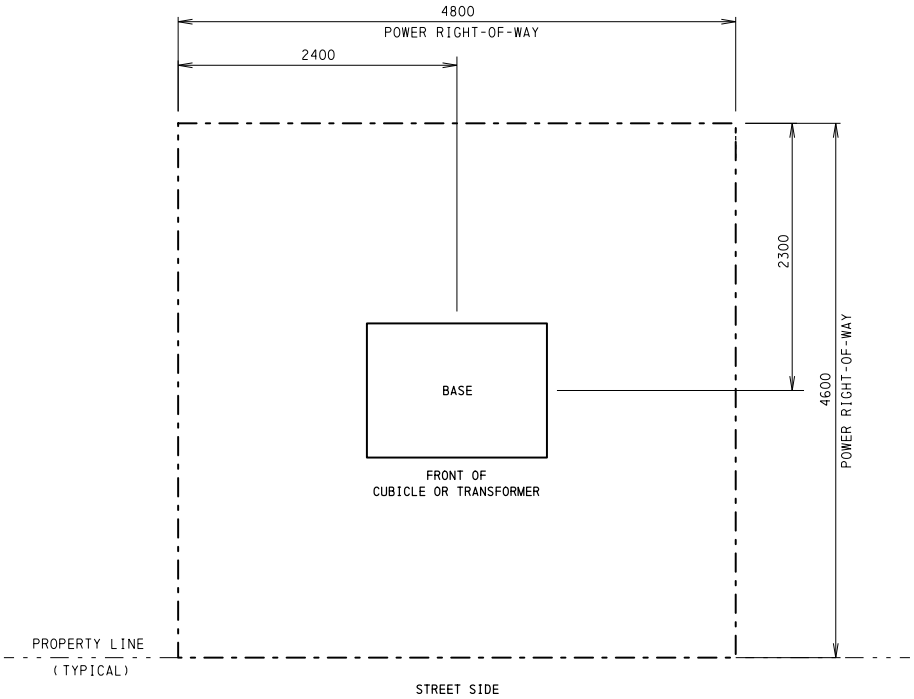

NOTES:

1. HOTSTICK OPERATIONS REQUIRE 3.0m UNOBSTRUCTED ACCESS.
2. FRONT OF CUBICLE OR TRANSFORMER TO FACE STREET.
3. MECHANICAL PROTECTION FOR PADMOUNTED EQUIPMENT SHALL BE CONSIDERED AS PER CSA C22.3 NO. 7-15 CLAUSE 10.5.

ALL DIMENSIONS ARE IN MILLIMETERS (INCHES) UNLESS OTHERWISE SPECIFIED.

EPCOR
APEGA PERMIT P7061
UNDERGROUND DISTRIBUTION STANDARDS

REVIEWED BY STANDARDS COMMITTEE:	2013-05-28
DRAFTED BY:	P. MANN
DESIGNED BY:	B. O'CALLAGHAN
SCALE:	N.T.S.
DATE REVISED:	2021-11-25

Member #77869, Rev 2 Only

PROFESSIONAL ENGINEER LISA JO ANN LIUSZ ALBERTA

2021-12-23

PERMIT TO PRACTICE
EPCOR DISTRIBUTION & TRANSMISSION INC
RM SIGNATURE:
RM APEGA ID #: 67305
DATE: 2022-01-04
PERMIT NUMBER: P007061
The Association of Professional Engineers and Geoscientists of Alberta (APEGA)

RIGHT-OF-WAY REQUIREMENT FOR SINGLE PHASE SWITCHING CUBICLE, SINGLE PHASE TRANSFORMER OR 3 PHASE TRANSFORMER

STANDARD NO. 60 00 07 00 12 001

PAGE NO. 1/ 1

DRAWING 3.5

Δ RIGHT-OF-WAY REQUIREMENT FOR SINGLE PHASE SWITCHING CUBICLE, SINGLE PHASE TRANSFORMER, OR 3 PHASE TRANSFORMER WITH 2.0m GAS RIGHT-OF-WAY

4.8 m X 6.6 m RIGHT-OF-WAY REQUIREMENT

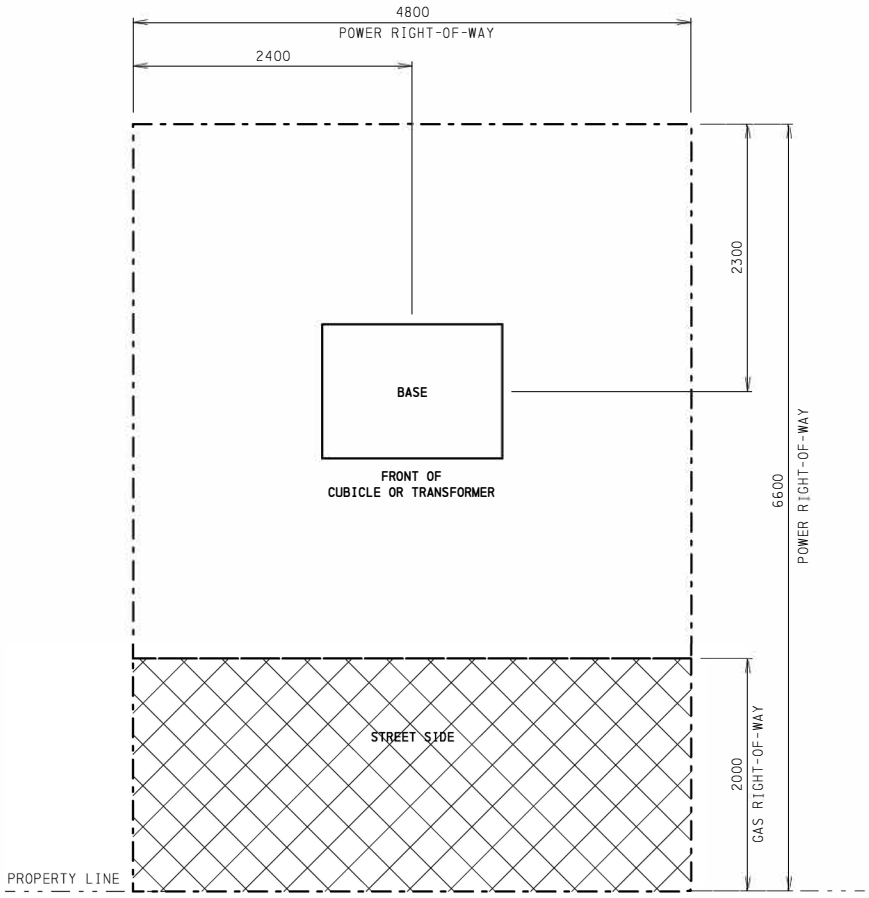

NOTES:

1. HOTSTICK OPERATIONS REQUIRE 3.0m UNOBSTRUCTED ACCESS.
2. FRONT OF CUBICLE OR TRANSFORMER TO FACE STREET.
3. MECHANICAL PROTECTION FOR PADMOUNTED EQUIPMENT SHALL BE CONSIDERED AS PER CSA C22.3 NO. 7-15 CLAUSE 10.5.

ALL DIMENSIONS ARE IN MILLIMETERS (INCHES) UNLESS OTHERWISE SPECIFIED.

EPCOR
APEGA PERMIT P7061
UNDERGROUND DISTRIBUTION STANDARDS

REVIEWED BY STANDARDS COMMITTEE:	2013-MM-28
DRAFTED BY:	P. MANN
DESIGNED BY:	C. O'CALLAGHAN
SCALE:	N.T.S.
DATE REVISED:	2021-11-25

Mmeber #77869, Rev 2 Only

PROFESSIONAL ENGINEER LISA JO ANN LIUSZ ALBERTA

2021-12-23

lisa jo liusz

PERMIT TO PRACTICE
EPCOR DISTRIBUTION & TRANSMISSION INC
FIRM SIGNATURE: Catherine Wagner
FIRM APEGA ID #: 67305
DATE: 2022-01-04
PERMIT NUMBER: P007061
The Association of Professional Engineers and Geoscientists of Alberta (APEGA)

RIGHT-OF -WAY REQUIREMENT FOR SINGLE PHASE SWITCHING CUBICLE, SINGLE PHASE TRANSFORMER OR 3 PHASE TRANSFORMER WITH 2.0m GAS RIGHT-OF-WAY

STANDARD NO. 60 00 07 00 12 002

PAGE NO. 1/ 1

DRAWING 3.6

Δ RIGHT-OF-WAY REQUIREMENT FOR 3 PHASE SWITCHING CUBICLE

5.0 m X 9.0 m RIGHT-OF-WAY REQUIREMENT

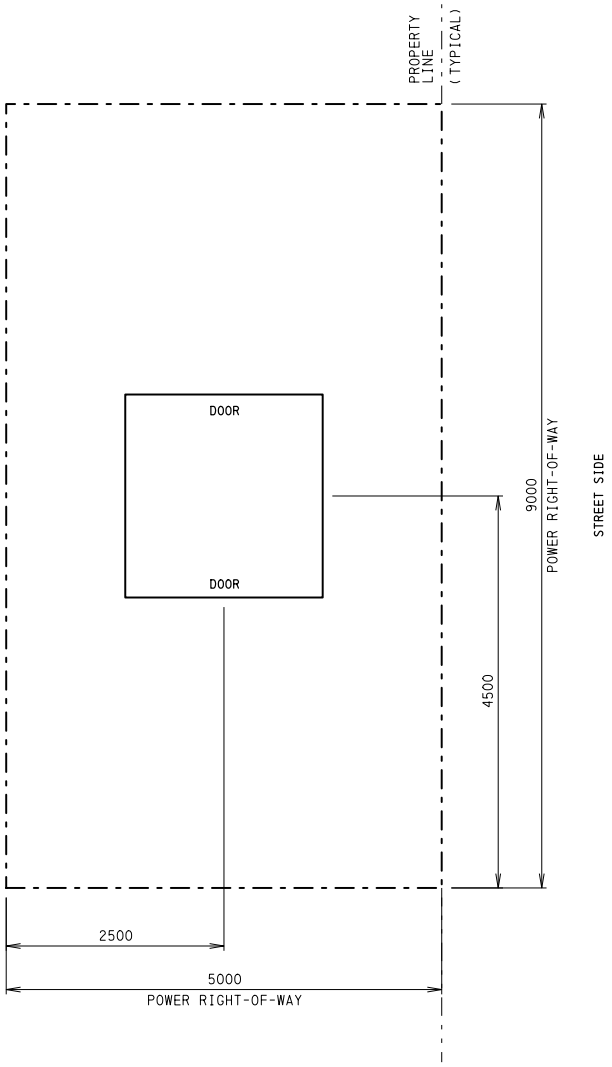

NOTES:

1. HOTSTICK OPERATIONS REQUIRE 3.0m UNOBSTRUCTED ACCESS.
2. MECHANICAL PROTECTION FOR PADMOUNTED EQUIPMENT SHALL BE CONSIDERED AS PER CSA C22.3 NO. 7-15 CLAUSE 10.5.

ALL DIMENSIONS ARE IN MILLIMETERS (INCHES) UNLESS OTHERWISE SPECIFIED.

EPCOR
APEGA PERMIT P7061
UNDERGROUND DISTRIBUTION STANDARDS

REVIEWED BY STANDARDS COMMITTEE:	2013-05-28
DRAFTED BY:	P. MANN
DESIGNED BY:	B. O'CALLAGHAN
SCALE:	N.T.S.
DATE REVISED:	2021-11-25

Member # 77869, Rev 2 Only

PROFESSIONAL ENGINEER LISA JO ANN LIUSZ ALBERTA

2021-12-23

lisa jo liusz

PERMIT TO PRACTICE
EPCOR DISTRIBUTION & TRANSMISSION INC
RM SIGNATURE: Catherine Wagner
RM APEGA ID #: 67305
DATE: 2022-01-04
PERMIT NUMBER: P007061
The Association of Professional Engineers and Geoscientists of Alberta (APEGA)

RIGHT-OF-WAY REQUIREMENT
FOR
3 PHASE SWITCHING CUBICLE

STANDARD NO. 60 00 07 00 12 005

PAGE NO. 1/ 1

DRAWING 3.7

Δ RIGHT-OF-WAY REQUIREMENT FOR 3 PHASE SWITCHING CUBICLE WITH 2.0m GAS RIGHT-OF-WAY

7.0 m X 9.0 m RIGHT-OF-WAY REQUIREMENT

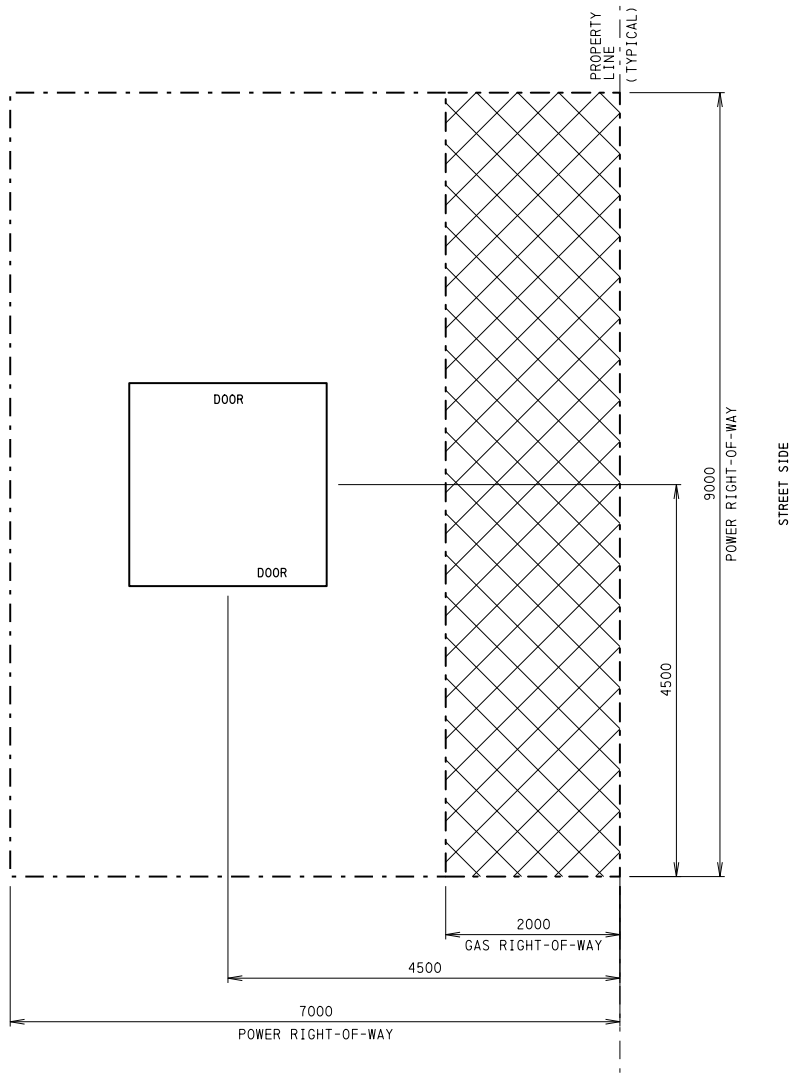

NOTES:

1. HOTSTICK OPERATIONS REQUIRE 3.0m UNOBSTRUCTED ACCESS.
2. MECHANICAL PROTECTION FOR PADMOUNTED EQUIPMENT SHALL BE CONSIDERED AS PER CSA C22.3 NO. 7-15 CLAUSE 10.5.

ALL DIMENSIONS ARE IN MILLIMETERS (INCHES) UNLESS OTHERWISE SPECIFIED.

EPCOR
APEGA PERMIT P7061
UNDERGROUND DISTRIBUTION STANDARDS

REVIEWED BY STANDARDS COMMITTEE:	2013-05-28
DRAFTED BY:	P. MANN
DESIGNED BY:	B. O'CALLAGHAN
SCALE:	N.T.S.
DATE REVISED:	2021-11-25

Member #77869, Rev 2 Only

PROFESSIONAL ENGINEER LISA JO ANN LIUSZ ALBERTA

2021-12-23

lisa jo liusz

PERMIT TO PRACTICE
EPCOR DISTRIBUTION & TRANSMISSION INC
PM SIGNATURE: Catherine Wagner
PM APEGA ID #: 67305
DATE: 2022-01-04
PERMIT NUMBER: P007061
The Association of Professional Engineers and Geoscientists of Alberta (APEGA)

RIGHT-OF-WAY REQUIREMENT
FOR
3 PHASE SWITCHING CUBICLE
WITH 2.0m GAS RIGHT-OF-WAY

STANDARD NO. 60 00 07 00 12 006

PAGE NO. 1/ 1

DRAWING 3.8

TYPICAL TRANSFORMER ALCOVE LAYOUT

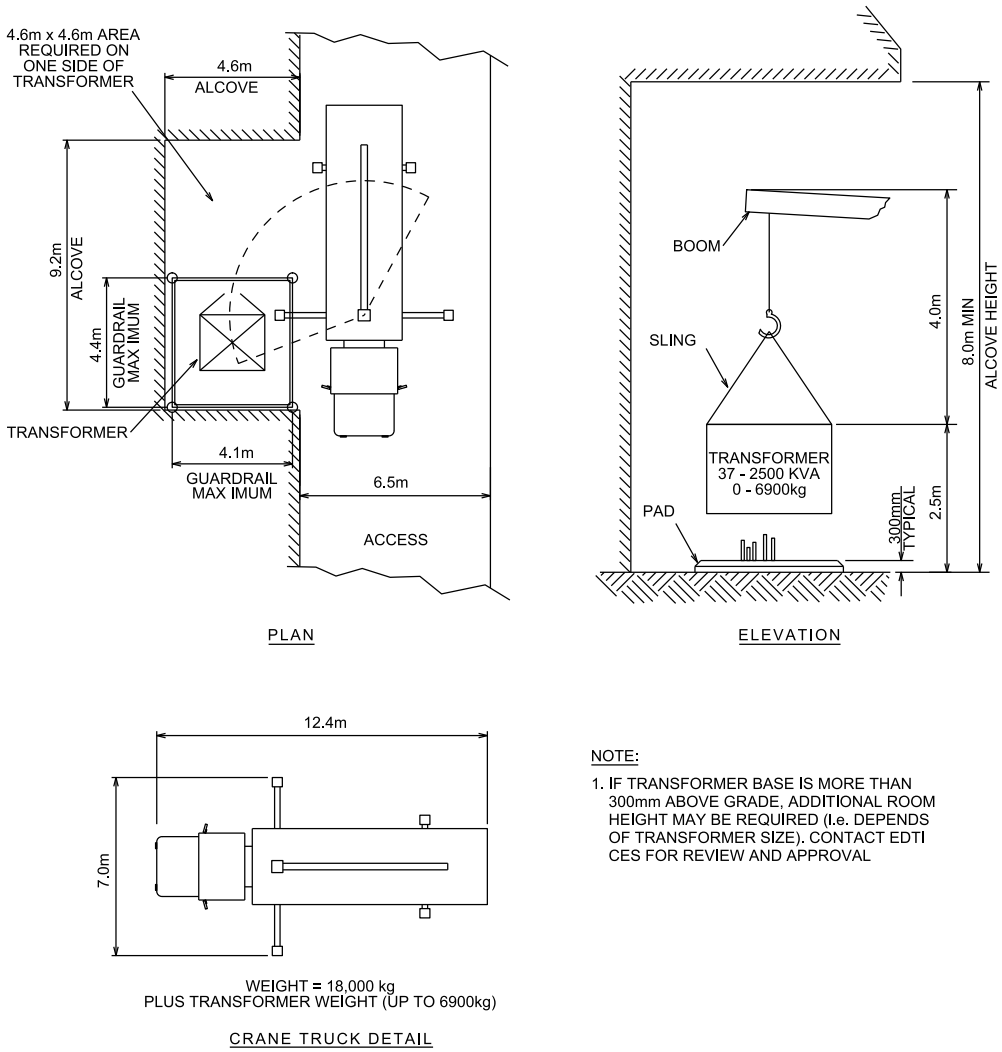

NOTE:

1. IF TRANSFORMER BASE IS MORE THAN 300mm ABOVE GRADE, ADDITIONAL ROOM HEIGHT MAY BE REQUIRED (I.e. DEPENDS OF TRANSFORMER SIZE). CONTACT EDTI CES FOR REVIEW AND APPROVAL

EPCOR CUSTOMER CONNECTION GUIDE		TYPICAL TRANSFORMER ALCOVE LAYOUT	
DATE REVISED: 2014-09-29	DRAWING NO.: 003	REFERENCE NO. 65 CC 07 00 27 100	PAGE NO. 1/1

CHECKLIST 3.1

APPLICATION CHECKLIST

Customer Connection Guide – Application Checklist

2022-MARCH-01

EPCOR Distribution & Transmission Inc.

Customer Connections

We need specific information about your project and property before EDTI can start developing a solution and estimate for your unique requirements. This checklist provides guidance on the information and documents you need to provide, and some important requirements you must meet as part of your application. EDTI may request additional information as it deems necessary to complete the project.

If information is missing, incomplete, or of inadequate quality, your application may be rejected and will be delayed.

All documents shall be submitted as scanned or electronically produced PDFs. Drawings, plans, and diagrams shall also be submitted as Microstation or AutoCad files.

This form shall accompany all applications submitted to EDTI for new services, service changes, and temporary services. Note that in the case of a temporary service being requested in addition to a new service or service change, a separate application and checklist will be required for each.

		Service Type				
Requirement List	(Optional)	Aerial/Underground Secondary (200A or less)	Aerial/Underground Secondary (>200A)	Padmount Transformer	Primary Metered (Aerial/Underground)	Unmetered
Type of Service being Requested (Select One)		☐	☐	☐	☐	☐
Application Form (Online)		☐	☐	☐	☐	☐
Site Owner Information – Name and Contact Info.		☐	☐	☐	☐	☐
Site Contact Information – Name and Contact Info.		☐	☐	☐	☐	☐
Consultant & Contractors – Name and Contact Info.	(Y)	☐	☐	☐	☐	☐
Municipal Address for Service Request		☐	☐	☐	☐	☐
Lot – Block – Plan for Service Request		☐	☐	☐	☐	☐(1)
City of Edmonton Permit Number	(Y)	☐	☐	☐	☐	☐
Service Details – Permanent or Temporary, Temp. Rating, Phases, Co-Gen, Voltage, Amperage		☐	☐	☐	☐	☐
Aerial Service Type Requested – Fed through underground lateral, or with aerial secondary line? (Include in additional notes for application.)		☐				
Building Details – Number of Floors, Height, Total Area, Estimated Demand		☐	☐	☐	☐	☐(2)
Third Party Agreement(5)	(Y)	☐	☐	☐	☐	☐
Property Titles and Easements, or Real Property Report			☐	☐	☐	
Load Calculations		☐	☐	☐	☐	
Common Project Title		☐	☐	☐	☐	
Calculations are Authenticated (Stamped) by an Engineer Registered in the Province of Alberta (6)					☐	
Legal Address (Municipal Address and Lot – Block – Plan)		☐	☐	☐	☐	
City of Edmonton - Electrical Permit Number	(Y)	☐	☐	☐	☐	

List of Motors and their HP Rating on Service		☐(1)	☐	☐	☐	
Readable when printed as 8-1/2x11 (ANSI A). *(Multiple numbered pages may be required to maintain readability.)*		☐	☐	☐	☐	
Electrical Site Plan(4)			☐	☐	☐	☐
Title Block, Common Project Title, Border, Scale, North Arrow, and Legend			☐	☐	☐	☐
Authenticated (Stamped) by an Engineer Registered in the Province of Alberta (6)			☐	☐	☐	☐
Legal Address (Municipal Address and Lot – Block – Plan)			☐	☐	☐	☐(3)
City of Edmonton - Electrical Permit Number	(Y)		☐	☐	☐	☐
Readable and separate lines visible when printed as 11x17 (ANSI B) drawing. *(Multiple drawings with a Key Plan may be required to maintain readability.)*			☐	☐	☐	☐
Locations of Existing and Planned Buildings on the Property, including overhangs and underground structures.			☐	☐	☐	☐
Location of Existing Buildings on Adjacent Property if within 3m of Proposed Poles/Cubicles/Transformers/Pedestals			☐	☐	☐	☐
All Legal Property Lines, Easements, and Right-of-Ways			☐	☐	☐	☐
Streets/Avenues/Alleys or other public thoroughfares abutting the property			☐	☐	☐	☐
Location of the Service Entrance Point (SEP) with coordinates or dimensioned to the property line.			☐	☐	☐	☐
Location, size, rating, and the number of conductors.			☐	☐	☐	☐
Location of poles and anchors on and adjacent to the property			☐	☐	☐	☐
Location of Cubicles, Transformers, Pedestals, and Pull Boxes – including the direction of the door openings, base size, and depicting bollards/guardrails.			☐	☐	☐	☐
Bonding details for any equipment within 3m of EDTI equipment.						
Equipment and Conductors dimensioned from building and property lines			☐	☐	☐	☐
Engineered Screw Pile designs for all Screw Piles used to support EDTI equipment.			☐	☐	☐	☐
Engineered drawings for any building structures used to support EDTI equipment.			☐	☐	☐	☐
Electrical Building Plan			☐	☐	☐	
Title Block, Common Project Title, Border, Scale, North Arrow, and Legend			☐	☐	☐	
Authenticated (Stamped) by an Engineer Registered in the Province of Alberta (6)			☐	☐	☐	
Legal Address (Municipal Address and Lot – Block – Plan)			☐	☐	☐	
City of Edmonton - Electrical Permit Number	(Y)		☐	☐	☐	
Readable and separate lines visible when printed as 11x17 (ANSI B) drawing. *(Multiple drawings with a Key Plan may be required to maintain readability.)*			☐	☐	☐	
Detailed Drawing of Electrical Room Layout, showing all door swings and dimensions, including free working clearances.			☐	☐	☐	
Provisions for Pilot Wire Relaying, where required.					☐	
The Location and Size of the Main Distribution Panel Labelled with the Voltage, Amperage, Phase, Wire Size, Temperature Rating, and Type.			☐	☐	☐	
Main feeder duct routing, including location and angle of bends, corner-to-corner distance between bends, changes in elevation, and manhole/vault detailed plans.					☐	

Electrical room plans showing all dimensions, equipment, panels, and service conductor routing. Door swings for all man and equipment doors shall be shown, with egress clearances when open. *(Required for >200A services only.)*			☐	☐	☐	
Electrical Single Line Diagram			☐	☐	☐	
Title Block, Common Project Title, Border, Scale, North Arrow, and Legend			☐	☐	☐	
Authenticated (Stamped) by an Engineer Registered in the Province of Alberta [(6)]			☐	☐	☐	
Legal Address (Municipal Address and Lot – Block – Plan)			☐	☐	☐	
City of Edmonton - Electrical Permit Number	(Y)		☐	☐	☐	
Readable and separate lines visible when printed as 11x17 (ANSI B) drawing. *(Multiple drawings with a Key Plan may be required to maintain readability.)*			☐	☐	☐	
Location, size, rating, and the number of conductors.			☐	☐	☐	
Equipment brand, model, certification mark, quantity, and location.			☐	☐	☐	
Main Breaker/Fuse Trip Rating and Interrupting Rating			☐	☐	☐	
Main Distribution Panel Rating			☐	☐	☐	
Service Entrance Information (line phase, voltage)			☐	☐	☐	
Switchgear Drawings/Shop Drawings/Specifications					☐	
Title Block, Common Project Title, Border, Scale, North Arrow, and Legend					☐	
Authenticated (Stamped) by an Engineer Registered in the Province of Alberta [(6)]					☐	
Legal Address (Municipal Address and Lot – Block – Plan)					☐	
City of Edmonton - Electrical Permit Number	(Y)				☐	
Readable and separate lines visible when printed as 11x17 (ANSI B) drawing. *(Multiple drawings with a Key Plan may be required to maintain readability.)*					☐	
Plans showing the switchgear layout in the electrical room, duct and cable routing, and details of EDTI Customer Engineering Services' cable termination cell.					☐	
Complete switchgear single-line diagrams showing interlock, all instrument and power transformers, fuses, relays, megavolt-amps (MVA) rating of customer switchgear, standby generation, transformer sizes, and types of winding, as well as other appropriate information. The control and protection schematic should show the breaker direct current (DC) control wiring, the transfer scheme between the main feeder, the standby feeders, and the pilot wire contacts, where required.					☐	
Shop Drawings of the Proposed Switchgear Critical internal dimensions for the service entrance cell and metering cell shall be provided. Route of service conductor and radius of its bends shall be depicted to the point of termination. Location of entrance terminations and grounding balls. *(Note: Switchgear must be approved for service entrance.)*					☐	
Main Breaker Specifications and Operating Conditions – Including Protection Curves					☐	
Operations Procedure for Standby Systems/Automation Schemes, if applicable.					☐	
Confirmation of the DC power supply for EDTI's pilot wire relay, if applicable.					☐	
Architectural Building Plan			☐	☐	☐	
Title Block, Common Project Title, Border, Scale, North Arrow, and Legend			☐	☐	☐	
Authenticated (Stamped) by an Engineer Registered in the Province of Alberta [(6)]			☐	☐	☐	

Legal Address (Municipal Address and Lot – Block – Plan)			☐	☐	☐	
Readable and separate lines visible when printed as 11x17 (ANSI B) drawing. *(Multiple drawings with a Key Plan may be required to maintain readability.)*			☐	☐	☐	
Final Main Floor Layout			☐	☐	☐	
All other final floor layouts where the electrical service shall pass enroute to main distribution panel.			☐	☐	☐	
Elevation profiles and sections for all buildings in relation to any existing or proposed aerial lines. (7)			☐	☐	☐	
Landscaping Site Plan			☐	☐	☐	
Title Block, Common Project Title, Border, Scale, North Arrow, and Legend			☐	☐	☐	
Legal Address (Municipal Address and Lot – Block – Plan)			☐	☐	☐	
All Legal Property Lines, Easements, and Right-of-Ways			☐	☐	☐	
Streets/Avenues/Alleys or other public thoroughfares abutting the property			☐	☐	☐	
Locations of Existing and Planned Buildings on the Property, including overhangs and underground structures.			☐	☐	☐	
Location of Cubicles, Transformers, Pedestals, and Pull Boxes – including the direction of the door openings, base size, and depicting bollards/guardrails.			☐	☐	☐	
All Electrical Utilities, including any adjacent to the property within 3m of the depicted spread of any trees or shrubs.			☐	☐	☐	
Main feeder duct routing, including location and angle of bends, corner-to-corner distance between bends, changes in elevation, and manhole/vault detailed plans.					☐	
Final Grades, Slopes, and Elevations			☐	☐	☐	
Final Surface Landscaping Materials (Grass, Sidewalks, Driveways, Rock Beds with Rock Size, etc.)			☐	☐	☐	
Location of all Planting Beds, Landscaping Features (Decorative Boulders/Rocks, Water Features, etc.), and Trees/Bushes with common name species information. *(Trees shall be drawn at 2/3 mature spread, shrubs at a mature spread.)*			☐	☐	☐	
Existing Utility Site Plan			☐	☐	☐	
Title Block, Common Project Title, Border, Scale, North Arrow, and Legend			☐	☐	☐	
Legal Address (Municipal Address and Lot – Block – Plan)			☐	☐	☐	
All Legal Property Lines, Easements, and Right-of-Ways			☐	☐	☐	
Streets/Avenues/Alleys or other public thoroughfares abutting the property			☐	☐	☐	
Locations of Existing and Planned Buildings on the Property, including overhangs and underground structures.			☐	☐	☐	
Location of Cubicles, Transformers, Pedestals, and Pull Boxes – including the direction of the door openings, base size, and depicting bollards/guardrails.			☐	☐	☐	
Equipment and Conductors dimensioned from building, property lines, and utilities.			☐	☐	☐	
Water Supply Lines - Existing and Planned			☐	☐	☐	
Drainage (Sewer) Lines - Existing and Planned			☐	☐	☐	
Natural Gas Lines - Existing and Planned			☐	☐	☐	
Communication Lines - Existing and Planned			☐	☐	☐	
Other Buried Utilities or Works - Existing and Planned			☐	☐	☐	
Main feeder duct routing, including location and angle of bends, corner-to-corner distance between bends, changes in elevation, and manhole/vault detailed plans.					☐	

Detailed depths and coordinates for each end and inflection point for on property utilities. Including detailed plans for manholes on property.					☐	

(1) Optional for this Service Type
(2) Unmetered Service only require the Estimated Demand
(3) Unmetered Services only require the Municipal Address
(4) For Unmetered Services, the "property" shall be the area within 7m of the Unmetered Service equipment.
(5) The Third Party Agreement is optional, but if not included, all correspondence will need to be through the Site Owner. EDTI will not be able to engage consultants and contractors working on behalf of the Site Owner.
(6) Required unless provided an exclusion under Alberta Legislation. See Customer Connection Guide - Section 1.5 – Legal Requirements.
(7) If the building is within 7m of the aerial line conductors.

Network Area: *Buildings are typically serviced using a Primary Metered or Padmount Transformer service. Please select whichever service type is applicable to your project needs.*

NOTE: *Delays, errors, and/or omissions in providing the information above will result in delays and additional costs for your project and/or its cancellation. Cancelled projects will need to resubmit with all missing information. Changes made to information after application will also result in delays and additional costs for your project. In some cases, changes may require you to resubmit your application if substantial rework is required in EDTI's sole opinion.*

4.0

Aerial Secondary Service

4.1 GENERAL INFORMATION

a. An aerial service is an overhead service run from a power pole.

b. Typical installations include homes and small commercial applications.

c. Please see Table 3.1 – Project Overview for a summary of your responsibilities as the Customer and the responsibilities of EDTI.

d. If you require an aerial secondary service, please complete the Commercial or Single Family Residential Application Form. See Section 3.3 – Applying for Service for details.

e. See Section 12 – Additional Information to learn about such topics as temporary power, splicing, operations, equipment relocation, and pre-inspection checklists.

4.2 Δ SERVICE TYPE GENERAL REQUIREMENTS

a. Aerial (overhead) services will not be provided in areas served by underground electrical facilities.

b. See Table 4.1 – Aerial Services – Acceptable Wire and Spans for details on conductor requirements for aerial services.

c. Special permission is required from EDTI prior to construction approval when installing primary (high-voltage) overhead wires on private property.

d. Aerial (overhead) services are not permitted on lots adjacent to “Major Commercial Corridors” as outlined in the City of Edmonton Bylaw # 12800**.** Streets such as St. Albert Tr., Mark Messier Tr., Fort Rd., Calgary Tr., Gateway Blvd., and Stony Plain Rd. are affected. Please see the Major Commercial Corridors Overlay in the Bylaw for specific details on areas included in this bylaw.

4.3 Δ SERVICE POLE LOCATION

a. It is critical that you contact EDTI Customer Engineering Services for your site-specific service pole location before beginning construction. The site-specific point can differ, based on a number of circumstances.

b. You should provide your preferred pole location on your project drawings as part of your application. EDTI will confirm the final location during the preliminary design development, and convey this information to you before or as part of the quote.

4.4 Δ POLES ON PRIVATE PROPERTY

a. EDTI reserves the right of final approval for the location of facilities before EDTI will grant construction approval.

b. EDTI requires truck access to poles where EDTI will be installing the wire. See Section 3.16 – Equipment Access for more information.

c. Poles on private property must meet EDTI construction standards. For example, they must be a minimum of Class 3 and butt-treated.

d. Copper based treated (green) poles are not acceptable.

e. Poles that only have secondary conductors attached must be 30 ft. long (total pole length) and set at a depth of 5 ft. (top of pole shall be 25 ft. above grade).

f. Poles with primary conductors attached must be a minimum of 45 ft. long (total pole length) and set at a depth of 6.5 ft. (top of pole shall be 38.5 ft. above grade).

g. Pole lines on private property must be constructed with required clearances from the property line to avoid interference with existing and future development on the adjacent property. The property line shall be considered a structure for this purpose. See the Alberta Electrical Utility Code for the required clearances.

h. The Customer must ensure an intermediate pole is in place if the span from the attachment device to the service pole is greater than the maximum span length noted in Table 4.1 – Aerial Services – Acceptable Wire and Spans.

i. Poles must be set as per Drawing 4.1 – Customer Owned Pole Installation on Private Property – Straight Line and Drawing 4.2 – Customer Owned Pole Installation on Private Property – Dead End Pole, and placed in a straight line between the service pole and the building attachment; otherwise, anchors may be required.

j. EDTI will not connect the Customer's service if the intermediate pole(s) are not satisfactory in EDTI's sole option.

    i. At EDTI's request, the Customer will be required to have the intermediate pole tested to ensure suitability.

4.5 Δ ATTACHMENT METHOD AND LOCATION

a. EDTI reserves the right to require the attachment point be adjusted to minimize or eliminate a service trespass to neighbouring properties, including those properties owned by the Customer if on a separate title.

b. A Customer shall not move their service connection as to cause the conductor to pass over another property.

c. The Customer is required to install the appropriate attachment device to the building. See Table 4.2 – Aerial Services – Attachment Methods and Drawing 4.3 – Heavy Duty Attachment Devices, Drawing 4.4 – Typical Overhead Aerial Service Installation, and Drawing 4.5 – Typical Residential Aerial Service Attachment Details.

d. Attachment devices must be secured to the building to withstand the service wire pulling tension requirements.

e. The attachment point and weatherhead on the building must be on the side facing the pole line and as close as is practical to the service pole (minimum 3m clearance to service pole is required).

f. The weatherhead shall be of an appropriate size to accommodate the service conductors and service mast as required in Table 4.1 and Drawings 4.4 and 4.5 Customer's conductor shall not exceed 250MCM.

g. The attachment shall be vertical, unless prior permission has been obtained from the City of Edmonton and EDTI to place it horizontally.

   i. Horizontal attachments may be used to increase clearances, depending on the angle of pull from the pole to the building. If you're not sure if you can use a horizontal attachment, request guidance from the City of Edmonton and EDTI.

h. The attachment point is to be a maximum of 6.0m from final grade and must be accessible by a ladder.

i. The weatherhead must be above the attachment point.

j. The attachment point for the electrical service must be above any communication services.

k. Ensure the vertical distance between the attachment point and the weatherhead is a minimum of 150mm and a maximum of 300mm.

l. Ensure the horizontal distance between the attachment point and the weatherhead is a minimum of 300mm and a maximum of 1000mm.

m. A minimum vertical clearance of 0.6m and a minimum horizontal clearance of 1.0m must be maintained between attachment devices at the building.

4.6 WIRE INSTALLATION

a. EDTI will make the final connection at the transformer.

b. Services exceeding the maximum spans noted in Table 4.1 may require an intermediate pole, or the Customer will have to redesign the service an underground system.

c. EDTI will supply and install up to 30.0m of service wire, according to spans noted in Table 4.1, and make all terminations at the weatherhead, once inspection approval is received.

d. The maximum length of service conductors permitted in a building is 3.0m, unless they are mechanically protected in rigid metal conduit, in which case the maximum is 7.5m.

TABLE 4.1

Δ AERIAL SERVICES – ACCEPTABLE WIRE AND SPANS

CUSTOMER'S SERVICE CONDUCTOR (AMPS)	WEATHER PROTECTED (WP) SERVICE WIRE	MAXIMUM ALLOWABLE SPAN
100	#4 AWG Multiplex	30m
125	1/0 AWG Multiplex	30m
150	1/0 AWG Multiplex	30m
200 (Residential)	1/0 AWG Multiplex	30m
200 (Commercial)	1/0 AWG Open	30m
300	4/0 AWG	15m
400	336.4 MCM	15m

TABLE 4.2

AERIAL SERVICES – ATTACHMENT METHODS

CUSTOMER SERVICE TYPE/SIZE	ATTACHMENT METHOD
Single phase less than or equal to 150A	Clevis (residential or commercial)
Single phase 200A – residential	Heavy-duty clevis
Single phase 151 - 600A – commercial	Three-spool heavy-duty rack (all)
3-phase less than or equal to 150A	Heavy-duty clevis
3-phase 151 - 400A	Four-spool heavy-duty rack

- Refer to Drawing 4.3 – Heavy Duty Attachment Devices for examples of allowable installations.

DRAWING 4.1

CUSTOMER OWNED POLE INSTALLATION ON PRIVATE PROPERTY – STRAIGHT LINE

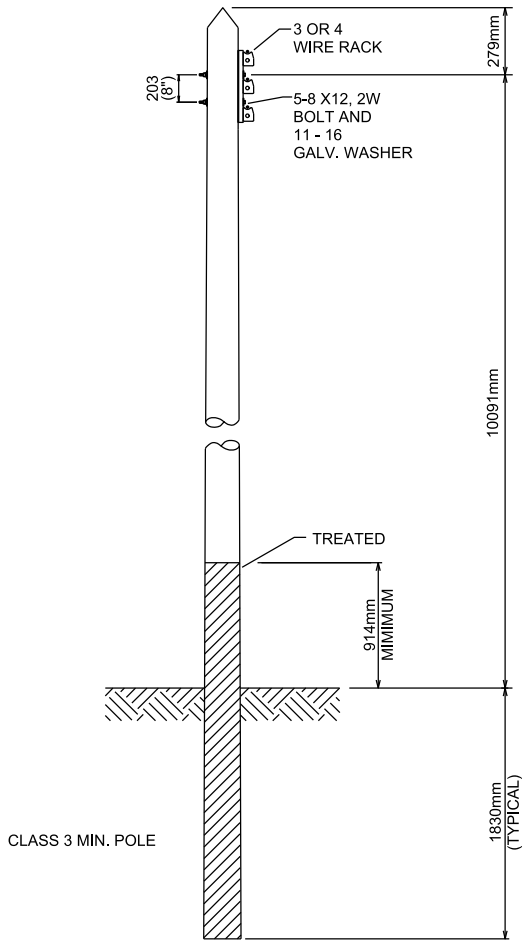

NOTES:

1. MINIMUM POLE HEIGHT IS 12.2m (40 FT) UNLESS A TALLER POLE IS REQUIRED FOR CLEARANCES
2. POLE SETTING DEPTH BASED ON POLE HEIGHT
3. FULL TREATMENT POLES NOT ALLOWED
4. DOWNHAUL WIRE TO BE SIZED BASED ON DESIGN TENSIONS
5. POLE INSTALLATION FOR REPRESENTATION PURPOSE ONLY

EPCOR CUSTOMER CONNECTION GUIDE		CUSTOMER OWNED POLE INSTALLATION ON PRIVATE PROPERTY - STRAIGHT LINE	
DATE REVISED: 2016-11-24	DRAWING NO.: 014	REFERENCE NO. 61 CC 07 00 05 181	PAGE NO. 1/1

DRAWING 4.2

CUSTOMER OWNED POLE INSTALLATION ON PRIVATE PROPERTY – DEAD END POLE

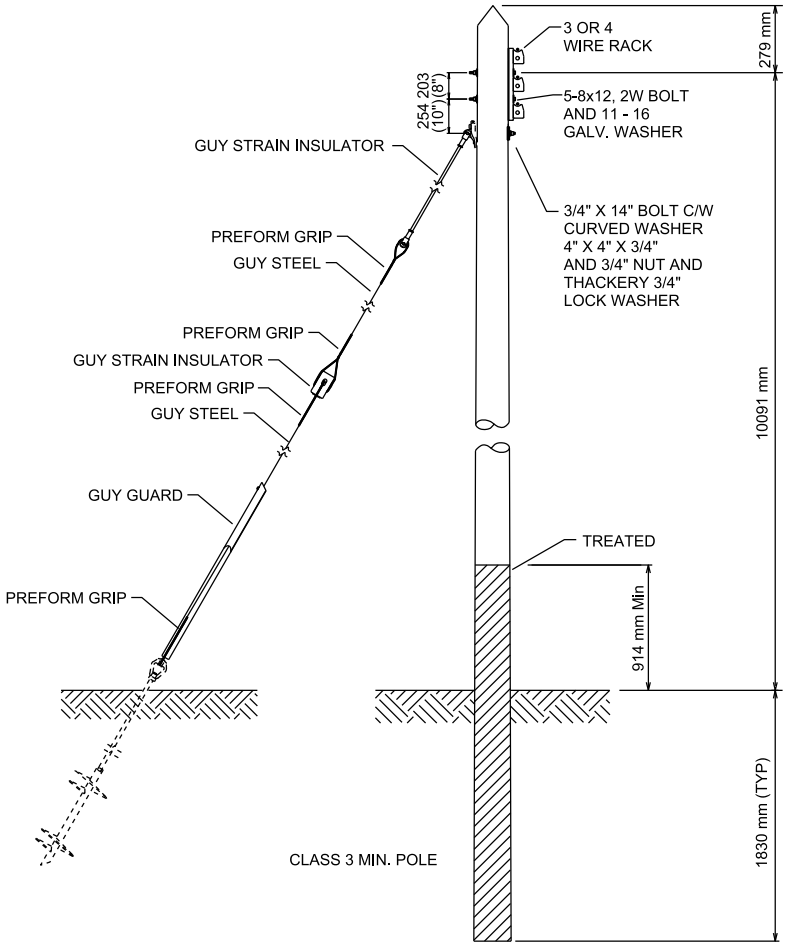

NOTES:

1. MINIMUM POLE HEIGHT IS 12.2m (40 FT) UNLESS A TALLER POLE IS REQUIRED FOR CLEARANCES
2. POLE SETTING DEPTH BASED ON POLE HEIGHT
3. FULL TREATMENT POLES NOT ALLOWED
4. DOWNHAUL WIRE TO BE SIZED BASED ON DESIGN TENSIONS
5. POLE INSTALLATION FOR REPRESENTATION PURPOSE ONLY

EPCOR CUSTOMER CONNECTION GUIDE		CUSTOMER OWNED POLE INSTALLATION ON PRIVATE PROPERTY - DEAD END POLE	
DATE REVISED: 2016-11-24	DRAWING NO.: 013	REFERENCE NO. 61 CC 07 00 05 180	PAGE NO. 1/1

DRAWING 4.3

HEAVY DUTY ATTACHMENT DEVICES

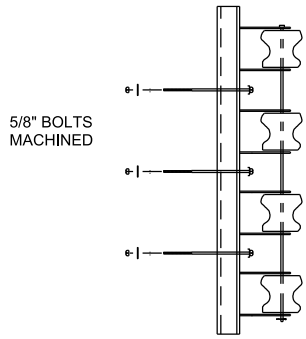

4 SPOOL RACK
ASSEMBLY

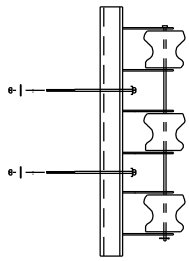

3 SPOOL RACK
ASSEMBLY

WALL CLEVIS ASSEMBLY AND INSTALLATION

UP TO 200A RESIDENTIAL
UP TO 150A COMMERCIAL

PREFFRRED METHOD

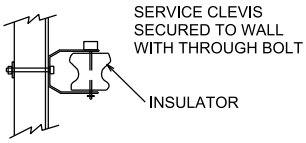

CLEVIS ASSEMBLY
AND INSTALLATION
UP TO 200A RESIDENTIAL
UP TO 150A COMMERCIAL

ALTERNATE METHOD

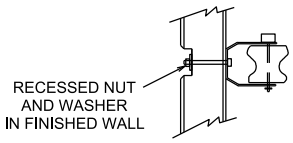

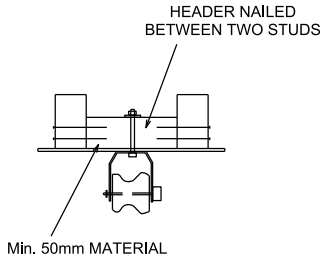

NOTES:

1. CLEVIS MUST BE INSTALLED THROUGH MIN 50mm THICK MATERIAL (NOT THROUGH FACIA BOARD)
2. MIMIMUM CLEARANCES TO GROUND MUST BE MAINTAINED
   - MINIMUM CLEARANCE 3500mm
   - MAXIMUM CLEARANCE 6000mm

EPCOR

CUSTOMER CONNECTION GUIDE

HEAVY DUTY ATTACHMENT DEVICES

DATE REVISED:	DRAWING NO.:	REFERENCE NO.	PAGE NO.
2014-09-29	015	61 CC 07 00 22 100	1/1

DRAWING 4.4

TYPICAL OVERHEAD AERIAL SERVICE INSTALLATION

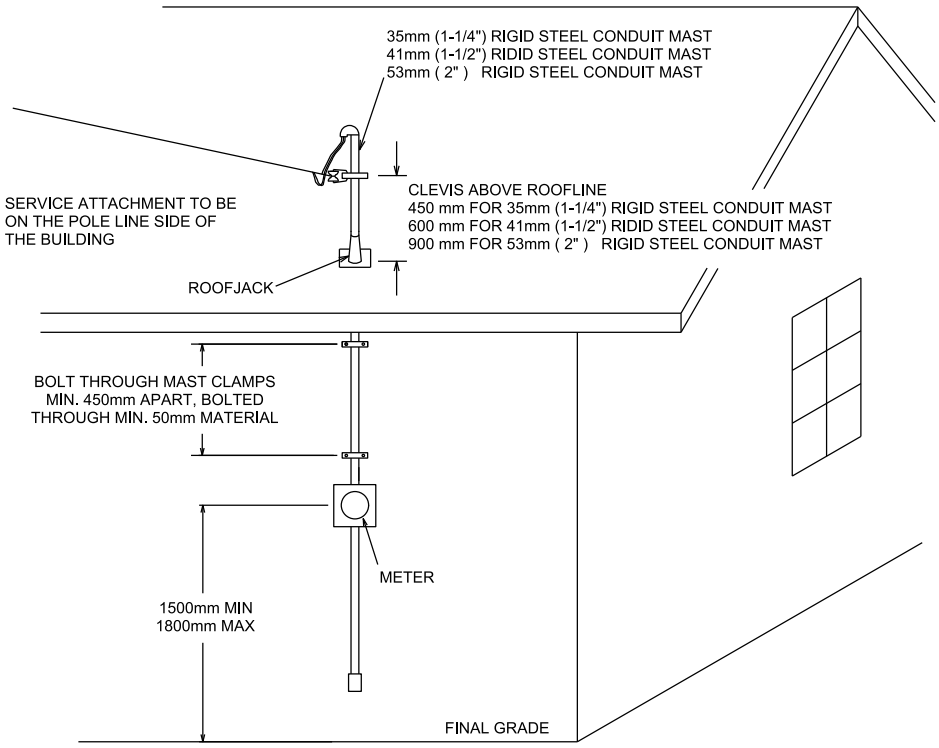

NOTE: MAXIMUM DISTANCE ABOVE ROOFLINE OR TOP SUPPORT FOR:

100A RESIDENTIAL SERVICE:

- 450 mm FOR 35mm (1-1/4") MAST
- 600 mm FOR 41mm (1-1/2") MAST
- 900 mm FOR 53mm (2") MAST

150A or 200A RESIDENTIAL SERVICE:

- 900 mm FOR 53mm (2") MAST

IN ALL CASES SERVICE ATTACHMENT TO BE ON THE POLE LINE SIDE OF THE BUILDING.

A MINIMUM 3m HORIZONTAL CLEARANCE IS REQUIRED BETWEEN THE SERVICE POLE AND THE BUILDING SERVICE ATTACHMENT POINT.

INSTALLATION AS PER CEC PART 1

EPCOR CUSTOMER CONNECTION GUIDE	TYPICAL OVERHEAD AERIAL SERVICE INSTALLATION (MAXIMUM SERVICE SPAN DISTANCE 30 m)		
DATE REVISED: 2017-01-24	DRAWING NO.: 016	REFERENCE NO. 61 CC 07 00 91 100	PAGE NO. 1/1

DRAWING 4.5

TYPICAL RESIDENTIAL AERIAL SERVICE ATTACHMENT DETAILS

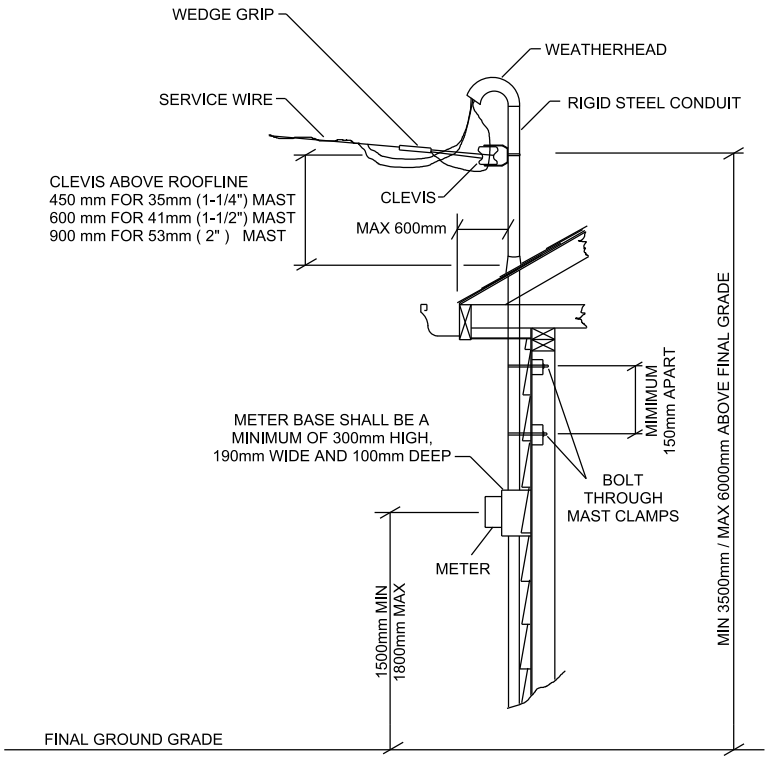

NOTE: MAXIMUM DISTANCE ABOVE ROOFLINE OR TOP SUPPORT FOR:

100A RESIDENTIAL SERVICE:

- 450 mm FOR 35mm (1-1/4") MAST
- 600 mm FOR 41mm (1-1/2") MAST
- 900 mm FOR 53mm (2") MAST

150A OR 200A RESIDENTIAL SERVICE:

- 900 mm FOR 53mm (2") MAST

IN ALL CASES SERVICE ATTACHMENT TO BE ON THE POLE LINE SIDE OF THE BUILDING

INSTALLATION AS PER CEC PART 1

EPCOR CUSTOMER CONNECTION GUIDE	TYPICAL RESIDENTIAL AERIAL SERVICE ATTACHMENT DETAILS (MAXIMUM DISTANCE 30 METERS) SERVICE ATTACHMENT TO BE ON THE POLE LINE SIDE OF THE BUILDING		
DATE REVISED: 2016-11-25	DRAWING NO.: 017	REFERENCE NO. 61 CC 07 00 91 001	PAGE NO. 1/1

5.0

Underground Secondary Service

5.1 GENERAL INFORMATION

a. An underground secondary service is a service that's fed from an existing transformer, new transformer, or pedestal installed on City of Edmonton property.

b. Typical installations include homes and small to medium commercial applications.

c. Please see Table 3.1 for a summary of your responsibilities as the Customer and the responsibilities of EPCOR Distribution and Transmission Inc. (EDTI).

d. If you decide that you require an underground secondary service, please complete the Commercial or Single Family Residential Application Form.

e. See Section 12 – Additional Information to learn about such topics as temporary power, splicing, operations, equipment relocation, and pre-inspection checklists.

5.2 SERVICE TYPE GENERAL REQUIREMENTS

<Intentionally left blank>

5.3 MULTI-FAMILY DEVELOPMENTS AND MOBILE HOME PARKS

This section applies to multiple-metered residential service connections where single phase padmount transformers and service pedestals are required on the Customer's property. While other information on secondary services found elsewhere in this guide also applies, the following information is specific to multi-family developments and mobile home parks.

a. Drawing 5.1 – Sample Submission for Multi-Family Developments provides guidance on the format requirements for multi-family development drawings.

b. All conductors must conform to Table 5.1 – Minimum Acceptable Single Phase Secondary Conductors for Underground Services.

c. A service pedestal shall be installed between the transformer and the Customer service entrance. The service pedestal shall meet CSA C22.2 requirements, and shall comply with all Canadian Electrical Code bending radius, spacing, and termination requirements. The maximum pedestal rating is 400A based on the allowable secondary conductors of parallel 4/0 AL from Table 5.1.

d. The Customer must identify service conductors at the padmount transformer by pedestal number, and at the pedestal by meter address, which is the address of the building the meter serves. Meter sockets must be identified by service address and pedestal number. Use a long-life ink on a tie-wrap attached to the conductors for this identification. This is mandatory if a Customer-owned distribution facility, such as a pedestal, is used.

e. For emergency purposes, each pedestal must be identified with the name and phone number of an on-site representative who is available 24 hours a day.

f. Before energization, the Customer must make all terminations on all incoming feeds from the transformer at the service pedestals, and at the neutrals in the pedestals, for the individual services to the units. Customers must not terminate the hot conductors of the service wire in the pedestal. EDTI will extend a Customer-supplied conductor to the switching cubicle or pole on City of Edmonton property.

5.4 FOUR PARTY JOINT-USE TRENCH FOR SINGLE-FAMILY RESIDENTIAL INSTALLATIONS

a. With prior approval from EDTI, a four party joint-use trench may be used for residential installations only.

b. Telephone and television cables as well as gas service lines can be placed in a four party joint-use trench with the power cable.

c. When gas service lines are installed along with power cables, the four party trench installation method must be followed.

d. A minimum of 0.3m must separate the gas and power lines and a marker tape must be installed 0.5m above the service cable. Please see Drawing 5.2 – Typical Underground Residential Service Installation Four Party Trench for details.

5.5 Δ SERVICE DUCTS

a. All permanent commercial services must be in duct.

b. High Density Polyethylene (HDPE) ducts shall not be permitted, even when certified for the intended use.

c. For residential installations, EDTI highly recommends, and may require, installing any cable that will ultimately end up under a building/structure or hard surface in duct. See Drawing 5.3 – Typical Underground Residential Service Installation on Property for a typical underground service installation.

d. Service conduits installed by contractors working on behalf of other utilities or the City of Edmonton must follow the construction standards of EDTI Customer Engineering Services. Contractors must not work within 1.0m of any electrical equipment.

e. If EDTI conduits have been stubbed to the property line, Customers must first confirm that the conduit exposed is the correct one, and then connect their supply conduit to EDTI's conduit. Contact us to arrange for conduit verification.

f. The Customer shall be responsible for installing and maintaining conduit sealing, and a suitable means of drainage, for ducts entering a building, per the Canadian Electrical Code.

5.6 DUCT BENDS

a. All bends exiting transformers and cubicles must be made of rigid, thick-walled PVC (Schedule 40) with minimum wall thickness of 6.0mm for a 100mm (4 in.) diameter duct, 6.6mm for a 125mm (5 in.) diameter duct, and 7.1mm for a 150mm (6 in.) diameter duct. DB2 bends are not acceptable.

b. An additional 3,000mm (10 ft.) horizontal section of rigid, thick-walled PVC must be attached to the bend.

c. Ensure all secondary ducts are aligned directly under the secondary bushings of the transformer and centred within the base opening.

d. All bends that EDTI will supply conductors for must be equipped with bell collars to avoid damaging cable.

e. All spare bends are to be covered (taped or covered by some other suitable method) to prevent material falling into them.

f. Precast concrete pad must be removed before inserting additional ducts into existing pad.

5.7 Δ CONDUCTORS

a. Secondary cables on all residential and multi-family developments must be concentric-neutral direct-buried type (USEB), when supplied from EDTI transformers and pedestals. See Table 5.1 for details.

b. For 3-phase padmount transformers, the maximum size of conductor allowed is 500MCM copper or 750MCM aluminum. **(750MCM copper conductor is not permitted.)**

c. The maximum size of secondary conductor allowed for commercial underground secondary services in an aerial area (secondary lateral) is 500MCM copper. (750MCM aluminum conductor is not permitted.)

d. For commercial installations, secondary cable must be individual RW90 conductors in duct.

e. Where secondary conductors are installed shorter than required, they shall be replaced by Customer to attain the required length. Splicing is prohibited.

f. See Table 5.1 for allowable secondary service cables.

g. The phasing of conductors must be identified with colour-coded cables installed.

h. Armoured or metal-sheathed (TECK) cable cannot be used for permanent services.

i. With EDTI permission, TECK cable can be used for temporary installations. The Customer must supply all associated fittings, including connectors, grounding bushings, and weatherheads. See Section 12.5 – Temporary Connections for details.

5.8 CABLE INSTALLATION

a. Telephone and television cables can be installed in the same trench as power conductors. When this is considered, design drawings must be forwarded to the appropriate organizations for their approval.

b. Cable cannot be installed on building footings or weeping tile.

c. Secondary cable ends must have heat shrink caps.

d. EDTI will make the final connection in the cubicle, transformer, or pedestal.

e. The Customer will supply and install secondary conductors from the Customer's switchgear to the transformer location, leaving 3.0m (no more or less) of conductors above the top of the precast transformer base. Then the conductors must be coiled in a clockwise direction and left in an organized manner around the inside perimeter of the base to allow for easy removal and shaping.

f. The maximum length of service conductors permitted in a building is 3.0m, unless they are mechanically protected in rigid metal conduit, in which case the maximum is 7.5m.

g. A maximum of six runs of secondary conductors, are permitted for all single phase padmount transformers; except for multifamily installations with pedestals where the limit shall be nine, and for single family installations where the limit shall be twelve.

h. A maximum of six runs of secondary conductors total (includes both permanent and temporary services) are permitted for 3-phase padmount transformers up to 750kVA.

i. A maximum of eight runs of secondary conductors total (includes both permanent and temporary services) are permitted for 1,000kVA to 2,500kVA 3-phase padmount transformers.

j. Where the service is 2,400A or larger, a maximum of ten runs of secondary conductors total (includes both permanent and temporary services) are permitted.

k. The Customer must identify service conductors by the meter address, by using longlife ink on a tie-wrap attached to the conductors. This identification is mandatory when there are multiple service connections or when a Customer-owned distribution facility, such as a pedestal, is used.

5.9 UNDERGROUND RESIDENTIAL DISTRIBUTION AREAS

This section applies to areas with a mix of residential and commercial lots that will contain underground power facilities and are designed and built by a developer. While other information on underground secondary services found elsewhere in this guide also applies, the following information is specific to underground residential distribution areas.

a. In underground residential distribution areas, the standard service size is 100A. The area's developer may have installed a larger cable to compensate for voltage drop. The cable size installed does not necessarily indicate the size of service that is available. Contact us for more information.

b. If power coils are left at the property line but are too short to reach the meter base, the Customer or the Customer's contractor must contact EDTI Meter Services to complete the splice. If the contractor has taken the most direct route but the cable is short, EDTI will complete the splice at no charge. In all other circumstances, there will be a charge for the splice. Contact EDTI Meter Services for splicing costs and payment details.

c. As the Customer, you or your contractor must ensure a splice pit is dug at the service entry location. See Section 12 – Additional Information for more information.

d. If there is no service conductor coiled at the property line, the Customer or the Customer's contractor must trench and supply and install conductors from the meter base to the property line, with enough conductors at the property line to allow for termination. Contact us for length.

e. In newer subdivisions, 30m of service cable is coiled on the property side of the gas easement/ utility right-of-way.

f. For residential services over 200A a dedicated transformer is required. If padmounted transformer is to supply the service, the transformer must be installed on Customer's property within a registered utility Right-of-Way (easement). See Section 3.8 – Easements and Utility Rights-of-Way for details.

5.10. UNDERGROUND SECONDARY SERVICE IN AN AERIAL AREA (SECONDARY LATERAL)

5.10.1. Δ Residential Installations

a. For residential installations, EDTI highly recommends, and may require, installing any cable that will ultimately end up under a building/structure or hard surface in duct. See Drawing 5.3 – Typical Underground Residential Service Installation on Property for a typical underground service installation.

b. EDTI will complete all work on City property, including:

   i. Supplying and installing conduit from the property line up the pole

   ii. Supplying and installing the required conductor from the property line to the pole. EDTI will leave a 30m coil at the property line, secured in a service box and backfilled.

c. A possible alternative to taking an underground service from an EDTI pole is to take an overhead service to the garage and sub-feed the house with an underground service.

5.10.2. Commercial Installations

a. The Customer must supply and install the service conduit from the Customer's panel to the property line.

b. The maximum size of service conduit is 100mm (4 in.) in diameter.

c. The Customer must connect the conduit to EDTI's conduit (if existing) at the property line.

d. The Customer must supply and install sufficient length of conductor to terminate at the pole-mounted transformer. EDTI will determine the length of conductor.

e. EDTI will complete all work on City property, including:

   i. Supplying and installing conduit from the property line up the pole.

   ii. Coordinating with the electrical contractor to ensure the Customer-supplied conductors are pulled from the property line up the pole.

TABLE 5.1

Δ MINIMUM ACCEPTABLE SINGLE PHASE SECONDARY CONDUCTORS FOR UNDERGROUND SERVICES

SERVICE SIZE	NUMBER/TYPE OF CABLES
100A	Existing: 1 – 2/C 1/0 AL XLPE 600V (typical 100A residential service cable since 2011) New & Replacements: 1 – 2/C 4/0 AL XLPE 600V
125A	Existing: 1 – 2/C 1/0 AL XLPE 600V – Cable Length Restricted (see note below) New & Replacements: 1 – 2/C 4/0 AL XLPE 600V
150A	Existing: 1 – 2/C 2/0 AL XLPE 600V New & Replacements: 1 – 2/C 4/0 AL XLPE 600V
200A	1 – 2/C 4/0 AL XLPE 600V
300A	2 – 2/C 2/0 AL XLPE 600V (parallel)
400A	2 – 2/C 4/0 AL XLPE 600V (parallel)
600A	3 – 2/C 250MCM AL XLPE 600V (parallel)

- Cables on all residential and multi-family developments must be concentric neutral direct-buried type (USEB).
- Voltage drop calculations are required to verify cable size suitability for the given length.
- The installation of 125A services using 1 – 2/C 1/0 AL XLPE 600V is restricted to a cable length from the meter base to the pedestal of 30m, or to the transformer of 50m.
- Historically, in underground residential distribution areas, the standard service size is 100A. The area developer may have installed larger cable (i.e. 2/C 2/0 or 2/C 4/0 AL XLPE 600V) to compensate for voltage drop. Cable size does not necessarily indicate the size of service that is available. Contact us for confirmation on all services larger than 100A.
- Customer to confirm load calculations do not exceed service components (e.g. cable, breaker, etc.) load capacity, per Canadian Electrical Code – Part I requirements.
- Service conductors shall be sized to Canadian Electrical Code – Part I requirements. Allowed conductor sizes are 1/0, 2/0, 4/0, and 250MCM.
- Multi-Family unit service cables require 4/0 conductors to be compatible with pedestal termination when applicable.
- 2/C #2 XLPE USEB 600V cable was the standard 100A service cable in EDTI's system until 2011. This cable is only allowed for use in those locations where it was installed at the time of area development.
- For services in which more than 30.0m of cable is required on private property (from property line to the meter socket), contact us to confirm voltage drop requirements.

DRAWING 5.1

SAMPLE OF SUBMISSION FOR MULTI-FAMILY DEVELOPMENTS

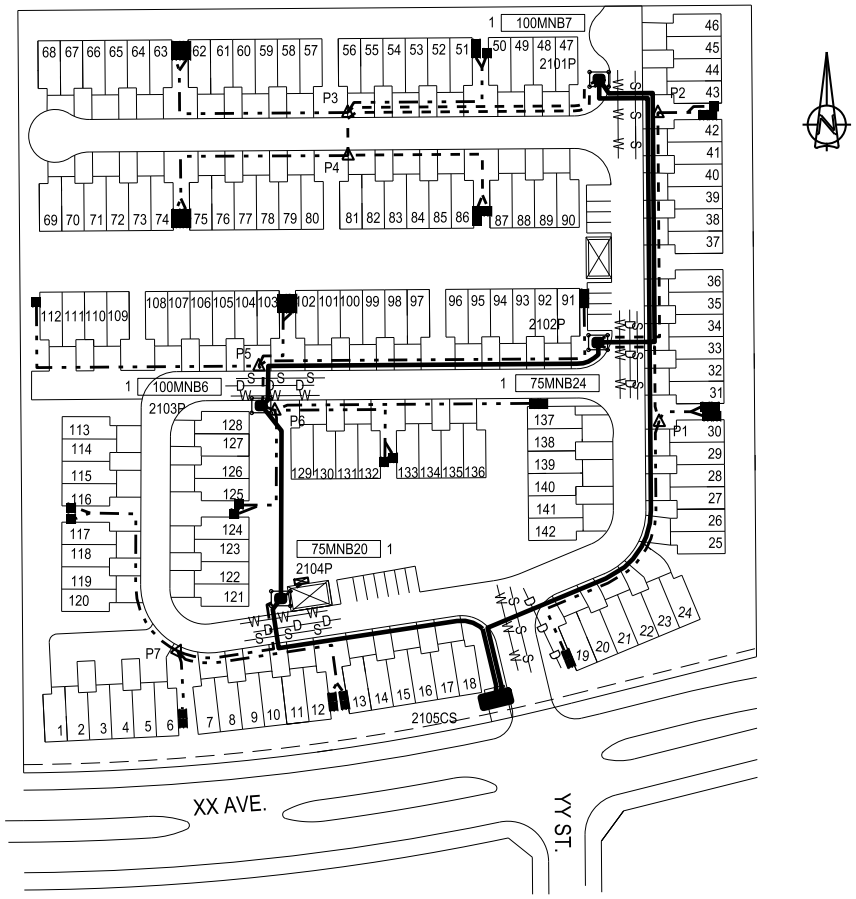

LEGEND

- PRIMARY CONDUCTOR 1-100C C/W 1-1/C #1/0 AL XLPE 25KV
- SECONDARY CONDUCTOR 2-100C E/W 1-2/C #4/0 AL XLPE
- SECONDARY CONDUCTOR 1-100C E/W 1-2/C #4/0 AWG AL XLPE
- SECONDARY CONDUCTOR 1-100C C/W 1-2/C #2/0 AL XLPE TO EACH FOUR GANG METER BASE
- WP HOUSE PANEL AND METER
- SERVICE PEDESTAL P7 C/W 2P-400A MAIN BREAKER ALL OTHERS C/W 2P-400A MAIN BREAKER
- PADMOUNTED TRANSFORMER C/W POSTS & GUARDRAIL
- SWITCHING CUBICLE
- FOUR GANG METER BASE
- UTILITIES W - WATER D - DRAINAGE S - SEWER

NOTES:

1. INDIVIDUAL SERVICE CABLES NOT SHOWN ON THIS EXAMPLE
2. DUCT IS REQUIRED UNDER ROADWAYS AND DRIVEWAYS
3. FOR SITES WITH MORE THAN TWO TRANSFORMERS A PRIMARY LOOP IS REQUIRED

EPCOR

CUSTOMER CONNECTION GUIDE

SAMPLE OF SUBMISSION FOR MULTI-FAMILY DEVELOPMENTS (FOR EXAMPLE PURPOSES ONLY)

DATE REVISED:	DRAWING NO.:	REFERENCE NO.	PAGE NO.
2014-09-29	012	60 CC 07 00 23 001	1/1

DRAWING 5.2

TYPICAL UNDERGROUND RESIDENTIAL SERVICE INSTALLATION FOUR PARTY TRENCH PAGE 1/2

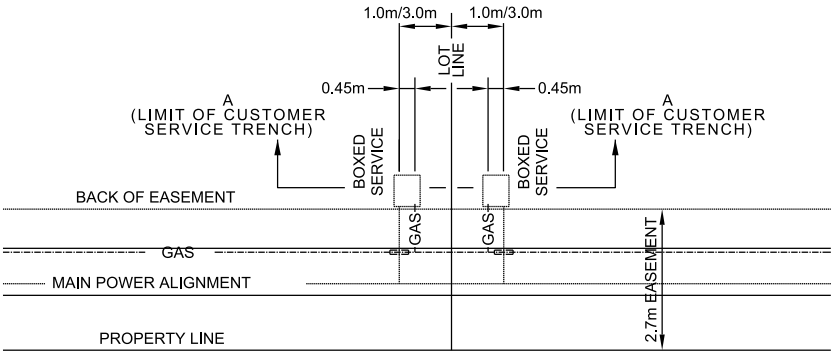

USE OF 4-PARTY SERVICE TRENCH WITH PRIOR APPROVAL FROM EDTI

LOT SERVICE DETAIL
N.T.S.

EPCOR

CUSTOMER CONNECTION GUIDE

TYPICAL UNDERGROUND RESIDENTIAL SERVICE INSTALLATION FOUR PARTY TRENCH (POWER, GAS, PHONE & CATV)

DATE REVISED:	DRAWING NO.:	REFERENCE NO.	PAGE NO.
2016-11-24	018	66 CC 07 02 47 011	1/2

DRAWING 5.2

TYPICAL UNDERGROUND RESIDENTIAL SERVICE INSTALLATION FOUR PARTY TRENCH PAGE 2/2

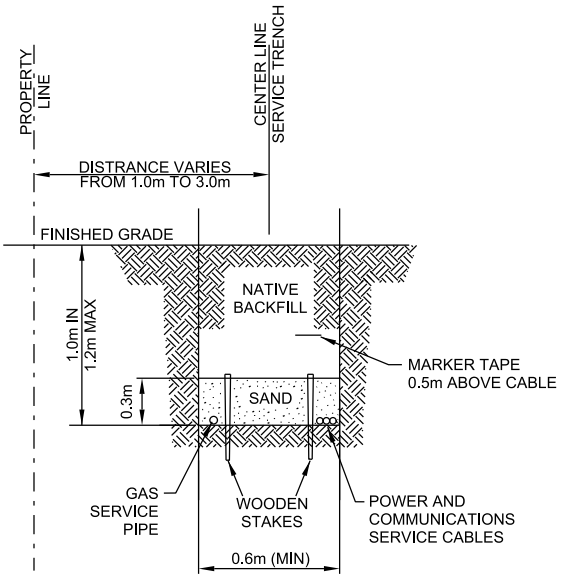

SECTION A - A
CROSS SECTION OF SERVICE TRENCH
N.T.S.

NOTES:

1. DEPENDING ON CONDITIONS, WHERE A CHAIN TYPE TRENCHER IS UTILIZED SAND MAY NOT BE REQUIRED. HOWEVER, WHERE EXCAVATION IS COMPLETED BY A HOE OR SIMILAR MEANS, SAND MUST BE PROVIDED 150mm BELOW AND 300mm ABOVE CABLE.
2. SERVICE CABLE TO BE MINIMUM 1000mm, MAXIMUM 1.2m IN DEPTH.
3. INSTALLATION MUST BE INSPECTED PRIOR TO COMPLETE BACKFILLING (INSTALL CABLE, SAND AND FILL, UP TO MARKER TAPE THEN CALL FOR INSPECTION). IF MULTIPLE INSPECTIONS ARE REQUIRED THERE WILL BE ADDITIONAL CHARGES.
4. CABLE MUST BE PROTECTED FROM MECHANICAL DAMAGE AT ALL TIMES.

EPCOR CUSTOMER CONNECTION GUIDE	TYPICAL UNDERGROUND RESIDENTIAL SERVICE INSTALLATION FOUR PARTY TRENCH (POWER, GAS, PHONE & CATV)		
DATE REVISED: 2016-11-24	DRAWING NO.: 018	REFERENCE NO. 66 CC 07 02 47 011	PAGE NO. 2/2

DRAWING 5.3

TYPICAL UNDERGROUND RESIDENTIAL SERVICE INSTALLATION ON PROPERTY

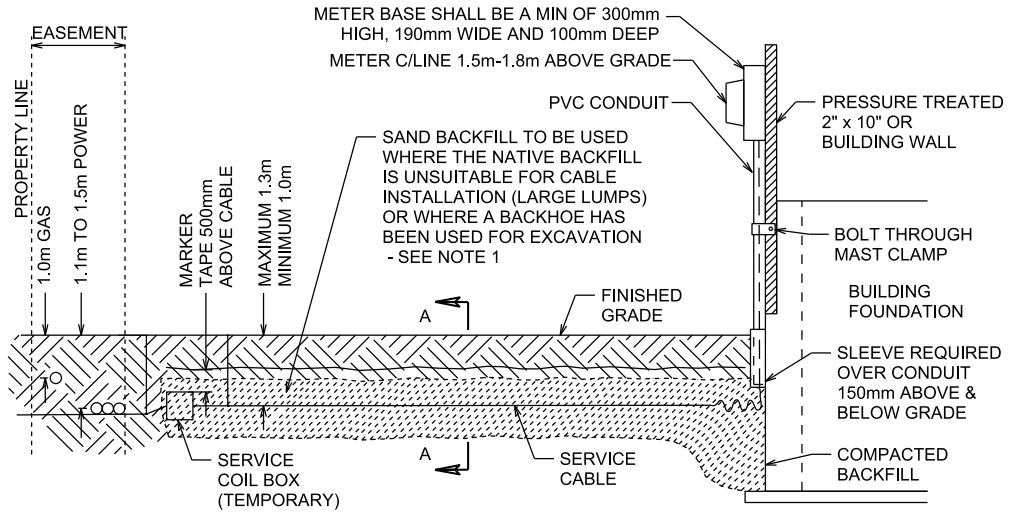

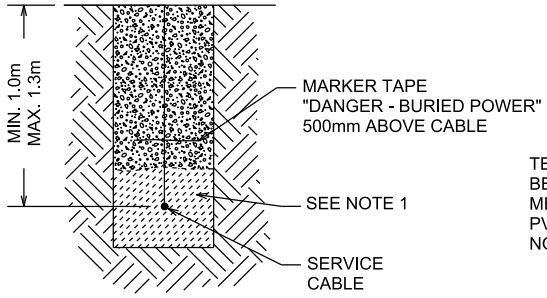

SECTION A-A

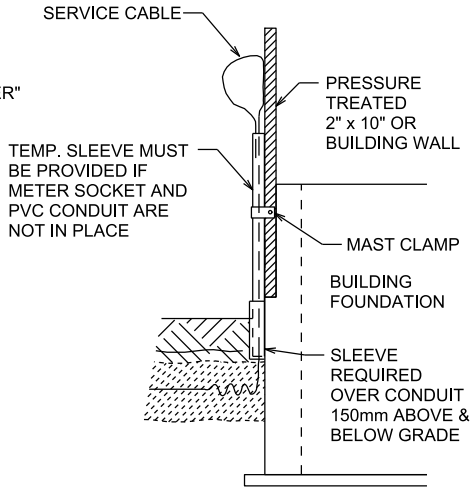

CABLE DETAIL IF NO METER SOCKET

NOTES:

1. DEPENDING ON CONDITIONS, WHERE A CHAIN TYPE TRENCHER IS UTILITIZED SAND MAY NOT BE REQUIRED. HOWEVER WHERE EXCAVATION IS COMPLETED BY A HOE OR SIMILAR MEANS, SAND MUST BE PROVIDED 150mm BELOW AND 300mm ABOVE CABLE.
2. SERVICE CABLE TO BE MINIMUM 1.0 m, MAXIMUM 1.3 m IN DEPTH.
3. INSTALLATION MUST BE INSPECTED PRIOR TO COMPLETE BACKFILLING (INSTALL CABLE, SAND AND FILL, UP TO MARKER TAPE THEN CALL FOR INSPECTION). IF MULTIPLE INSPECTIONS ARE REQUIRED THERE WILL BE ADDITIONAL CHARGES.
4. CABLE MUST BE PROTECTED FROM MECHANICAL DAMAGE AT ALL TIMES.

EPCOR CUSTOMER CONNECTION GUIDE	TYPICAL UNDERGROUND RESIDENTIAL SERVICE INSTALLATION ON PROPERTY		
DATE REVISED: 2017-05-03	DRAWING NO.: 002	REFERENCE NO. 66 CC 07 02 47 010	PAGE NO. 1/1

6.0

Padmount Transformer Service

6.1 GENERAL INFORMATION

a. A padmount transformer service refers to a ground-mounted transformer located on private property.

b. Typical installations include medium to large commercial applications, large houses, and multi-family sites.

c. Please see Table 3.1 – Project Overview for a summary of your responsibilities as the Customer as well as EDTI's responsibilities.

d. If you require a padmount transformer service, please complete the Commercial or Single Family Residential Application Form. See Section 3.3 – Applying for Service for details.

e. See Section 12 – Additional Information to learn about such topics as temporary power, splicing, operations, equipment relocation, and pre-inspection checklists.

6.2 SERVICE TYPE GENERAL REQUIREMENTS

a. See Table 5.1 – Minimum Acceptable Single Phase Secondary Conductors for Underground Services for details on conductor requirements for underground services.

b. EDTI must be notified prior to construction approval when neutral grounding devices are incorporated into service equipment.

6.3 MULTI-FAMILY DEVELOPMENTS AND MOBILE HOME PARKS

This section applies to multiple-metered residential service connections where single phase padmount transformers and service pedestals are required on the Customer's property. While other information on padmount transformer installations found elsewhere in this guide also applies, the following information is specific to multi-family developments and mobile home parks.

a. Drawing 5.1 – Sample Submission for Multi-Family Developments provides guidance on the format requirements for multi-family development drawings.

b. The Customer in multi-family developments must supply the primary cable.

c. All conductors must conform to Table 6.1 – Primary Cable, Duct, and Pull Box Requirements. Stranded conductor shall be used, solid conductor shall not be permitted.

d. Refer to Drawings 3.1, 3.2, and 3.3 for the primary voltage in your area, and contact us for confirmation.

e. All primary cables must be installed in duct on private property.

f. For multi-family sites where the primary duct is proposed between the last transformer and the cubicle, a coil of primary cable should be direct-buried at the property line for EDTI to extend into the switching cubicle. Once EDTI extends the cable into the cubicle, the contractor must install split pipe for conduit coupling.

g. For sites with more than two transformers, a primary loop feed is required. Please contact us to confirm loop feed requirements.

h. The Customer must supply the manufacturer's cable production test results, as per EDTI specifications for primary cables, prior to cable installation. The test results must be provided to EDTI.

i. The Customer must provide concrete bases for single phase transformers, as per Drawing 6.3 – Installation of Precast Concrete Base for Single Phase Transformers.

j. A service pedestal shall be installed between the transformer and the Customer service entrance. The service pedestal shall meet CSA C22.2 requirements, and shall comply with all Canadian Electrical Code bending radius, spacing, and termination requirements. The maximum pedestal rating is 400A based on the allowable secondary conductors of parallel 4/0 AL from Table 5.1.

k. The Customer must identify service conductors at the padmount transformer by pedestal number, and at the pedestal by meter address, which is the address of the building the meter serves. Meter sockets must be identified by service address and pedestal number. Use a long-life ink on a tie-wrap attached to the conductors for this identification. This is mandatory when a Customer-owned distribution facility such as a pedestal is used.

l. For emergency purposes, each pedestal must be identified with the name and phone number of an on-site representative who is available 24 hours a day.

m. Before energization, the Customer must make all terminations on all incoming feeds from the transformer at the service pedestals, and at the neutrals in the pedestals, for the individual services to the units. Customers must not terminate the hot conductors of the service wire in the pedestal. EDTI will extend a Customer-supplied conductor to the switching cubicle or pole on City of Edmonton property.

6.4 Δ PADMOUNT TRANSFORMERS AND SWITCHING CUBICLES

a. EDTI reserves the right of final approval for the location of facilities.

b. EDTI requires truck access to on-property transformers, switching cubicles, poles, and pull boxes where EDTI will be installing the cable. See Section 3.16 – Equipment Access for more information.

c. EDTI will supply, install, and maintain required transformers and switching cubicles, and perform all required primary and secondary conductor terminations at the transformer and switching cubicle.

d. When a transformer or switching cubicle is required on the Customer's property, the Customer must provide the precast concrete bases with an appropriate ground grid and guardrails. Please see Section 6.5 – Ground Grids and Guardrails for Padmounted Equipment.

e. When a transformer or switching cubicle is required for servicing it must be placed on the Customers site within a registered utility Right-of-Way (easement). See Section 3.8 – Easements and Utility Rights-of-Way for details.

f. The Customer must provide concrete bases for transformers, as per Drawing 6.3 – Installation of Precast Concrete Base for Single Phase Transformers and Drawing 6.4 – Installation of Precast Concrete Base for Three Phase Transformers.

g. Required clearances between transformers and buildings can be as high as 6.0m, depending on the type of transformer used.

   i. This is particularly true in our 5kV service area, where 347/600V transformers are required. See Drawing 3.1 for the primary voltage in your area, and contact us to confirm the required clearance for your specific installation.

h. Switching cubicles must be connected to EDTI's main line in such a manner as to provide a loop feed. No radial-fed cubicle installations will be allowed on private property.

i. When the Customer is required to install a switching cubicle base, it shall be constructed in accordance with:

   - Drawing 6.5 – Installation of Precast Concrete Base for 4-Way Single Phase 15kV 200A Dead Front Switching Cubicle
   - Drawing 6.6 – Installation of Precast Concrete Base for 4-Way Single Phase 25kV 200A Dead Front Switching Cubicle
   - Drawing 6.7 – Installation of Precast Concrete Base for 4-Way 3 Phase 15kV Switching Cubicle (All Variants)
   - Drawing 6.8 – Installation of Precast Concrete Base for 4-Way 3 Phase 25kV Switching Cubicle (All Variants)

j. The fault indicator lights adjacent to the "B" compartment of switching cubicles must face the main road.

k. Excavation for transformer and switching cubicle bases shall be stepped so that the native backfill is not disturbed under the ground grid area. This will help prevent the ground rods from bending and deforming during backfilling and compaction. The area where the ground grid and rods are installed shall not be excavated deeper than required to install the ground grid.

l. The bottom of the excavation where the base will be installed requires 300mm of compacted 20mm crushed gravel.

m. Proper sub-base compaction is crucial to ensure transformer and switching cubicle bases are installed correctly. Ensure that 20mm crushed gravel is compacted in lifts of 150mm or less, at optimal moisture. See Drawings 6.3, 6.4, 6.5, 6.6, 6.7, and 6.8.

n. Pressure-treated lumber is required under all switching cubicle bases and Single phase transformer bases, per Drawings 6.3, 6.5, 6.6, 6.7, and 6.8.

o. If the location of the precast base is within 4.0m of a building foundation or if soil conditions do not support precast bases, engineered screw piles or concrete piles must be installed.

   i. When piles are used, wood planks shall not be used. The concrete pad shall sit directly on pile cap/plate. If shims are required, steel shims affixed with welds or appropriate construction adhesive may be used. Drawings authenticated by a Professional Engineer registered in the Province of Alberta with APEGA shall be supplied to EDTI before EDTI will grant approval for piles.

   ii. When piles are used, the duct bends shall not be less than 36 in. Radius bends.

p. The Customer shall submit compaction test reports for all pad installations on site. If adequate compaction cannot be achieved, piles are required. See Section 3.12 – Trenching and Backfilling for compaction and backfill requirements.

q. The use of 24 in. bends may be permitted where the edge of the base is within 9.14m (30 ft.) of the property line. This option shall not be used in conjunction with screw piles. Special care to achieve proper compaction is necessary to avoid pull out.

r. No obstructions that could interfere with high-voltage switching—such as large rocks, decorative boulders, trees, and fences—shall be allowed within 3.0m on the door sides of transformers and switching cubicles.

s. Within 3.0m of padmounted equipment, landscaping must slope away from the base for proper drainage and safe operational switching per Drawings 6.3, 6.4, 6.5, 6.6, 6.7, and 6.8.

t. Equipment must not be subject to flooding under runoff conditions.

u. Rough grade must be established at 100mm to 150mm below final grade and marked on the base prior to inspection.

v. The height of the top of the concrete base must be between 250mm and 300mm above final grade.

w. Curbs within 3.0m of the door sides of transformers and switching cubicles require approval from EDTI prior to construction.

x. When a switching cubicle base is installed, the Customer must install a pull string in each duct between the cubicle and transformer.

y. When padmounted equipment is to be located on top of a structure, other than a precast base, authenticated drawings prepared by a Professional Engineer registered in the Province of Alberta with APEGA must be submitted to EDTI.

6.5 Δ GROUND GRIDS AND GUARDRAILS FOR PADMOUNTED EQUIPMENT

a. Transformers and switching cubicles must be protected from mechanical damage. Customers are required to provide guardrails for all installations of transformers and switching cubicles on private property.

b. Guardrails must have removable sections in front of the doors of equipment, as per Drawings 6.3 and 6.4 for transformers, and Drawing 6.9 – Typical Guardrail for Bollard & Guard Post Installation for switching cubicles. Please note that switching cubicles have two sets of doors, requiring removable sections in front of each.

c. A single welded stud on the guardrail post in lieu of a double bolt connect shall be permitted, so long as the same size bolt is used, and the weld interface is not a spot or stitch weld (e.g. full weld all around).

d. Customers are responsible for installing ground grids around all padmounted equipment. They must consist of four copper-clad ground rods interconnected by 4/0 bare copper grounding conductor and an additional two 4/0 bare copper grounding conductor tails, connected to the ground bus of the equipment.

e. A sufficient length of #4/0 bare copper grounding conductor must be installed to allow 5.0m (no more or less) to be left above the top of the precast transformer base. The conductor must be left in an organized manner to allow for easy removal and shaping.

f. Ground rod resistance must measure 6 ohms or less.

g. All stubbed ducts shall extend a minimum of 1.0m past the ground grid's outer edge.

h. The minimum distance to the property line for the ground grids of padmount transformers and switching cubicles is 1.0m.

i. When non-EDTI equipment or buildings/structures are placed within 3.0m of the edge of EDTI equipment, the ground grid of the EDTI equipment must be bonded using two tails to the ground of the non-EDTI equipment or building/structure. The Customer must show details on the power plan of how the bonding is to be achieved. The detail must also show the clearance between the edge of the EDTI equipment and non-EDTI equipment/building/structure. The non-EDTI equipment or building/structure cannot be installed within 1.0m of the EDTI ground grid; and may not be located within the guardrails.

j. Ground grids for padmount equipment located on the top of a parkade must be bonded to the rebar of the building with two #4/0 conductors terminating to a remote ground grid. These conductors must be physically separated. The equipment base must be encircled by a #4/0 bare copper conductor embedded in the concrete 900mm outside of the base. The gradient control conductor must be bonded to the rebar in the four corners, with two tails from alternate corners entering the base and a length of 5.0m extending above the top of the base. Authenticated drawings prepared by a Professional Engineer registered in the Province of Alberta with APEGA must be submitted to EDTI.

k. See Drawing 6.10 – Ground Grid Requirements for 15kV and 25kV Switching Cubicles and Three Phase Transformers Next to Each Other for ground grid requirements when cubicles and transformers are next to each other.

l. Fine-grain clay backfill is required around the ground grid.

m. Special care must be taken to ensure that the subgrade around and under the base is compacted without damaging the ground rods, ground grid or the ground conductors (tails).

6.6 Δ BLAST WALLS

a. Blast walls (including a roof) may be required in some circumstances. EDTI will inform the Customer if they are required after an application is submitted. The blast walls must consist of one of the following:

   i. 150mm thick reinforced concrete.

   ii. 200mm solid concrete blocks.

   iii. An alternative equivalent non-combustible rated design. Authenticated drawings prepared by a Professional Engineer registered in the Province of Alberta with APEGA must be submitted to EDTI for this option.

6.7 Δ SERVICE DUCTS

a. All permanent commercial services must be in duct.

b. High Density Polyethylene (HDPE) ducts shall not be permitted, even when certified for the intended use.

c. For residential installations, EDTI highly recommends, and may require, installing any cable that will ultimately end up under a building/structure or hard surface, in duct. See Drawing 5.3 – Typical Underground Residential Service Installation on Property for a typical underground service installation.

d. Duct must be installed where primary cable is deemed inaccessible by EDTI.

e. All ducts must be equipped with bell collars at their ends to avoid damaging the cable.

f. The installation of primary service cable under buildings/structures is not permitted, even when in duct.

g. The Customer will provide all conduits, pull boxes, and manholes required for installing the electrical services on the Customer's property. EDTI approved product shall be used, including rigid PVC, DB2, Carlon Borguard, or Terracon.

h. The Customer cannot install ducts into an energized manhole or handhole.

i. Conduit size requirements for primary cables depend on cable size and voltage. See Drawing 3.1 for primary voltage and Table 6.1 for primary cable, duct, and pull box standards.

j. Service conduits installed by contractors working on behalf of other utilities or the City of Edmonton must follow EDTI's construction standards. Contractors must not work within 1.0m of any electrical equipment.

k. When EDTI conduits have been stubbed to the property line, Customers must first confirm that the conduit exposed is the correct one, and then connect their supply conduit to EDTI's conduit. Contact us to arrange for conduit verification.

l. Where gas easements/utility rights-of-way exist, the service ducts are to be extended past the gas easement/utility right-of-way and capped.

m. If the pulling tension of the cable exceeds its allowable limit, a pull box must be installed. See Section 6.9 – Ground-Mounted Pull Boxes for more information.

n. The Customer shall be responsible for installing and maintaining conduit sealing, and a suitable means of drainage, for ducts entering a building, per the Canadian Electrical Code.

6.8 DUCT BENDS

a. All bends exiting transformers and cubicles must be made of rigid, thick-walled PVC (Schedule 40) with minimum wall thickness of 6.0mm for a 100mm (4 in.) diameter duct, 6.6mm for a 125mm (5 in.) diameter duct, and 7.1mm for a 150mm (6 in.) diameter duct. DB2 bends are not acceptable.

b. An additional 3,000mm (10 ft.) horizontal section of rigid, thick-walled PVC must be attached to the bend.

c. The primary duct must be aligned directly underneath the primary transformer bushings and centred within the base opening, per Drawings 6.3 and 6.4. The conduit bends must exit the earth at 90 degrees.

d. The secondary ducts must be aligned directly underneath the secondary transformer bushings and centred within the base opening, per Drawings 6.3 and 6.4. The conduit bends must exit the earth at 90 degrees.

e. All bends must be equipped with bell collars to avoid damaging the cable.

f. Each bend which is not capped specifically for a Customer's service stub must have an end bell collar permanently installed on the open end located outside of the switching cubicle (i.e. both ends of the bend must have end bell collars).

g. All spare bends are to be covered (taped or covered by some other suitable method) to prevent material falling into them.

h. Primary ducts exiting switching cubicles must be identified (i.e. identify the piece of equipment the pipe services).

i. Precast concrete pad must be removed before inserting additional ducts into existing pads.

j. See Drawings 3.1, 3.2 and 3.3 for primary voltage and Table 6.1 for primary cable, duct, and pull box standards.

6.9 Δ GROUND-MOUNTED PULL BOXES

a. EDTI reserves the right of final approval of the pull box size and location.

b. Communication cables cannot share the same pull box with primary or secondary cables.

c. Customer-owned facilities cannot share the same pull box with EDTI facilities.

d. If the pulling tension of the cable exceeds its allowable limit, a pull box must be installed. See Drawing 6.1 for details.

e. The cumulative total of all bends between pulling points shall not exceed 360 degrees of bends.

f. The size of the ground-mounted pull box required depends on the type of cable being installed. See Table 6.1 for details.

g. Conduits must enter and leave the pull box at the same level.

h. All bends entering/exiting pullboxes, manholes, or vaults must be made of rigid, thick-walled PVC (Schedule 40) with minimum wall thickness of 6.0mm for a 100mm (4 in.) diameter duct, 6.6mm for a 125mm (5 in.) diameter duct, and 7.1mm for a 150mm (6 in.) diameter duct. DB2 bends are not acceptable.

6.10 Δ CONDUCTORS

a. See Drawing 3.1 for primary voltage and Table 6.1 for primary cable, duct, and pull box standards.

b. Secondary cables on all residential and multi-family developments must be concentric-neutral direct-buried type (USEB), when supplied from EDTI transformers and pedestals. See Table 5.1 for details.

c. For 3-phase padmount transformers, the maximum size of conductor allowed is 500MCM copper or 750MCM aluminum. (750MCM copper conductor is not permitted.)

d. For commercial installations, secondary cable must be individual RW90 conductors, in duct.

e. Where secondary conductors are installed shorter than required, they shall be replaced by Customer to attain the required length. Splicing is prohibited.

f. See Table 5.1 for allowable secondary service cables.

g. The phasing of conductors must be identified with colour-coded cables installed.

h. Armoured or metal-sheathed (TECK) cable cannot be used for permanent services.

i. With EDTI permission, TECK cable can be used for temporary installations. The Customer must supply all associated fittings, including connectors, grounding bushings, and weatherheads. See Section 12.5 – Temporary Connections for details.

6.11 Δ CABLE INSTALLATION

a. If the pulling tension of the cable exceeds its allowable limit, a pull box must be installed. See Section 6.9 – Ground-Mounted Pull Boxes for more information.

b. Telephone and television cables can be installed in the same trench as power conductors. Design drawings must be forwarded to the appropriate organizations for their approval.

c. Cable cannot be installed on building footings or weeping tile.

d. Secondary cable ends must have heat shrink caps.

e. Primary cable ends must be wrapped with elastomeric tape (e.g. Greenline) to prevent the migration of moisture in the cable before testing. Elastomeric tape must be wrapped in a spiral shape overlapping half of each previous wrap at a time and then covered with black low-voltage vinyl tape. A minimum of two layers of half-lapped tape is to be applied. Immediately after testing, heat shrink caps must be installed on primary cable ends.

f. EDTI will make the final connection in the cubicle, transformer, or pedestal. Multi-Family Customer owned pedestals are an exception to this rule.

g. EDTI will supply and install all primary conductors in the Customer-prepared conduit, but only after the primary ductwork has passed an electrical inspection. Multi-family sites are an exception to this rule.

h. Cable coiling in Base

   i. The Customer will supply and install secondary conductors from the Customer's switchgear to the transformer location, leaving 5.0m of conductors above the top of the precast transformer base.

   ii. After inspection, the conductors shall be coiled in a clockwise direction and left in a reasonably clean and organized manner around the inside perimeter of the base (contacting approximately 3 of the 4 walls) to allow for easy removal and shaping.

   iii. Phasing of the secondary conductors shall be completed with colour-coded (jacketed) cables.

   iv. After installation, ensure the ground wire is not buried under the other cables.

   v. The primary conduits and any other vacant ducts shall not have their access impeded by the coiled cables.

   vi. Place 1-2 tie wraps at the tail ends only of each phase, and lie the tails down in the base and secure.

   vii. The follow images provide an example of the cable coiling requirements:

      - Image 6.1 – Example of Coiled Cables – Inside Base
      - Image 6.2 – Example of Coiled Cables – Looking into Base

   viii. If the cables are not shaped as required, a re-inspection of the installation will be required, and a re-inspection fee will apply.

i. The maximum length of service conductors permitted in a building is 3.0m, unless they are mechanically protected in a rigid metal conduit, in which case the maximum length is 7.5m.

j. A maximum of six runs of secondary conductors, are permitted for all single phase padmount transformers; except for multifamily installations with pedestals where the limit shall be nine, and for single family installations where the limit shall be twelve.

k. A maximum of six runs of secondary conductors total (includes both permanent and temporary services) are permitted for 3-phase padmount transformers up to 750kVA.

l. A maximum of eight runs of secondary conductors total (includes both permanent and temporary services) are permitted for 1,000kVA to 2,500kVA 3-phase padmount transformers.

m. Where the service is 2,400A or larger, a maximum of ten runs of secondary conductors total (includes both permanent and temporary services) are permitted.

n. The Customer will identify service conductors by the meter address by using long-life ink on a tie-wrap attached to the conductors. This identification is mandatory when there are multiple service connections or when a Customer-owned distribution facility, such as a pedestal, is used.

IMAGE 6.1

Δ EXAMPLE OF COILED CABLES – INSIDE BASE (180 DEGREE VIEW)

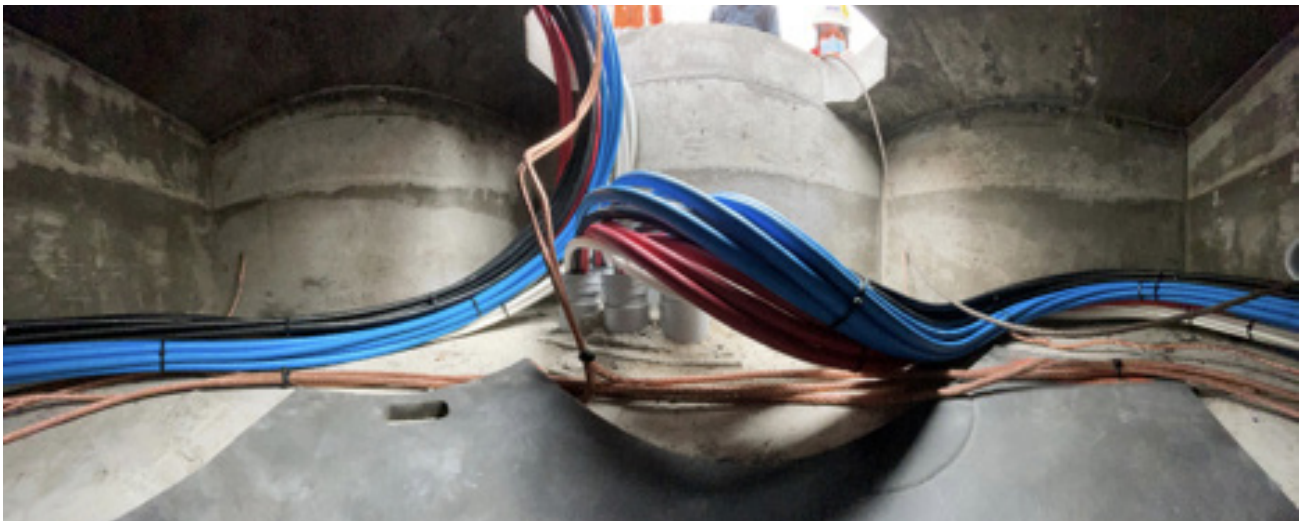

IMAGE 6.2

Δ EXAMPLE OF COILED CABLES – LOOKING INTO BASE

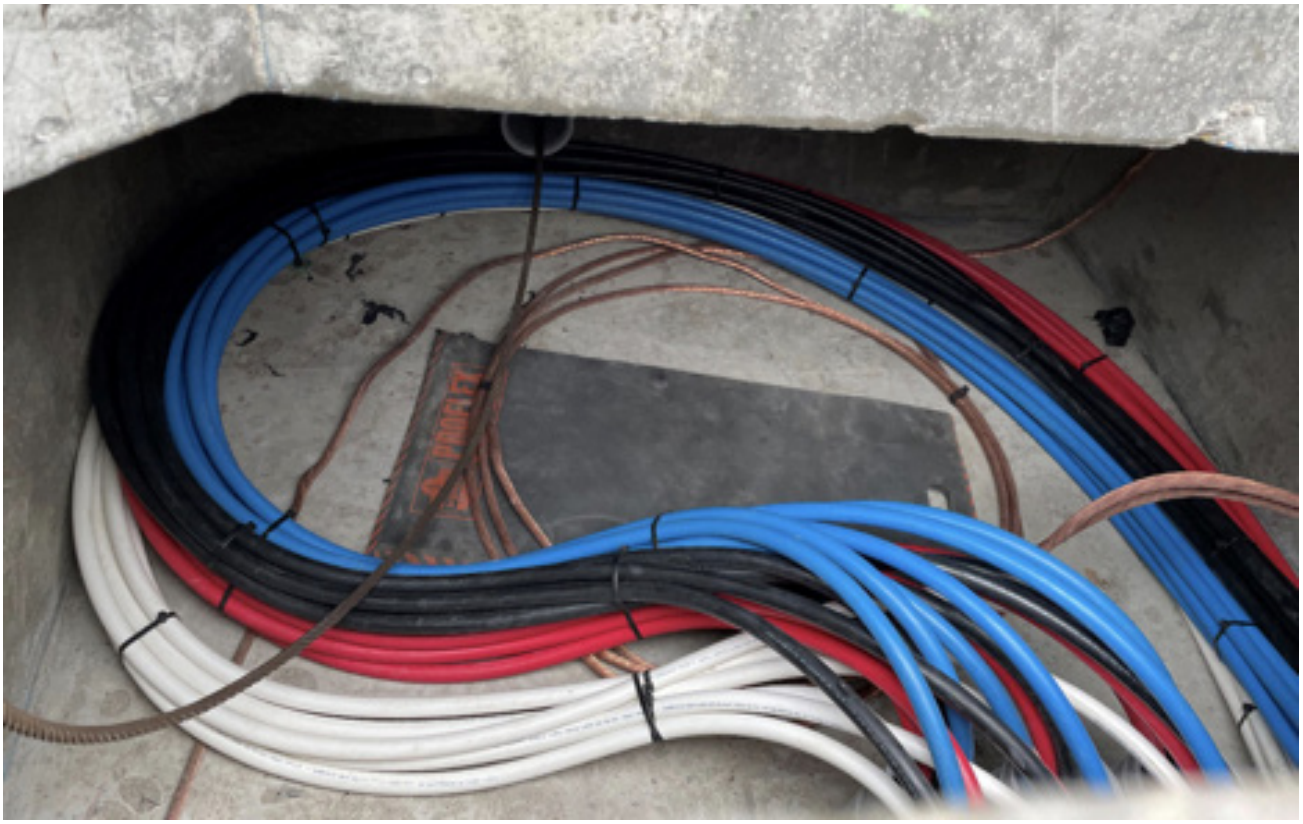

TABLE 6.1

Δ PRIMARY CABLE, DUCT AND PULL BOX REQUIREMENTS

CABLE TYPE	VOLTAGE	MINIMUM BENDING RADIUS FOR CABLE		CONDUIT SIZE	MINIMUM RADIUS OF DUCT BENDS	PULL BOX SIZE (SEE DRAWING 6.1)
		DRESSING	PULLING			
1-1/C 1/0 AL XLPE CN-J	15kV	329mm	493mm	100mm (4 in.)	610mm (24 in.)	Small
3-1/C 1/0 AL XLPE CN-J	15kV	329mm	493mm	100mm (4 in.)	915mm (36 in.)	Small
3-1/C 500 MCM CU XLPE CN-J Triplexed	15kV	578mm	823mm	150mm (6 in.)	915mm (36 in.)	Manhole (Type T) by Variance Only
3-1/C 750 MCM CU XLPE CN-J Triplexed	15kV	684mm	908mm	150mm (6 in.)	915mm (36 in.)	Manhole (Type T) by Variance Only
3-1/C 750 MCM CU EPR LC Shield – J Triplexed	15kV	631mm	899mm	150mm (6 in.)	915mm (36 in.)	Manhole (Type T) by Variance Only
1-1/C #1/0 XLPE AL	25kV	380mm	571mm	100mm (4 in.)	915mm (36 in.)	Small
3-1/C #1/0 XLPE AL	25kV	380mm	571mm	100mm (4 in.)	915mm (36 in.)	Small
3-1/C 500 MCM Al XLPE CN-J	25kV	523mm	785mm	150mm (6 in.)	915mm (36 in.)	Manhole (Type T) by Variance Only
3 -1/C 750 MCM CU XLPE CN-J Triplexed	25kV	762mm	1,087mm	150mm (6 in.)	1,219mm (48 in.)	Manhole (Type T) by Variance Only

- If pulling lengths exceed the maximum pulling tension of the cable, or the cumulative total of all bends between pulling points exceeds 360 degrees, pull boxes shall be required.
- Conduits must enter and exit the pull box at the same level.
- Communication cables cannot share the same pull box with primary cables.
- Please see Drawing 6.2 – Primary Cable, Duct, and Pull Box Examples for Examples A and B, showing maximum pulling distances for two standard installations.
- Manhole (Type T) – EDTI Standard No. 72 00 07 00 35 022.

DRAWING 6.1

Δ INSTALLATION OF PRECAST CONCRETE 4-WAY PULL BOX PAGE 1/5* (SIZE SMALL AS INDICATED IN TABLE 6.1)

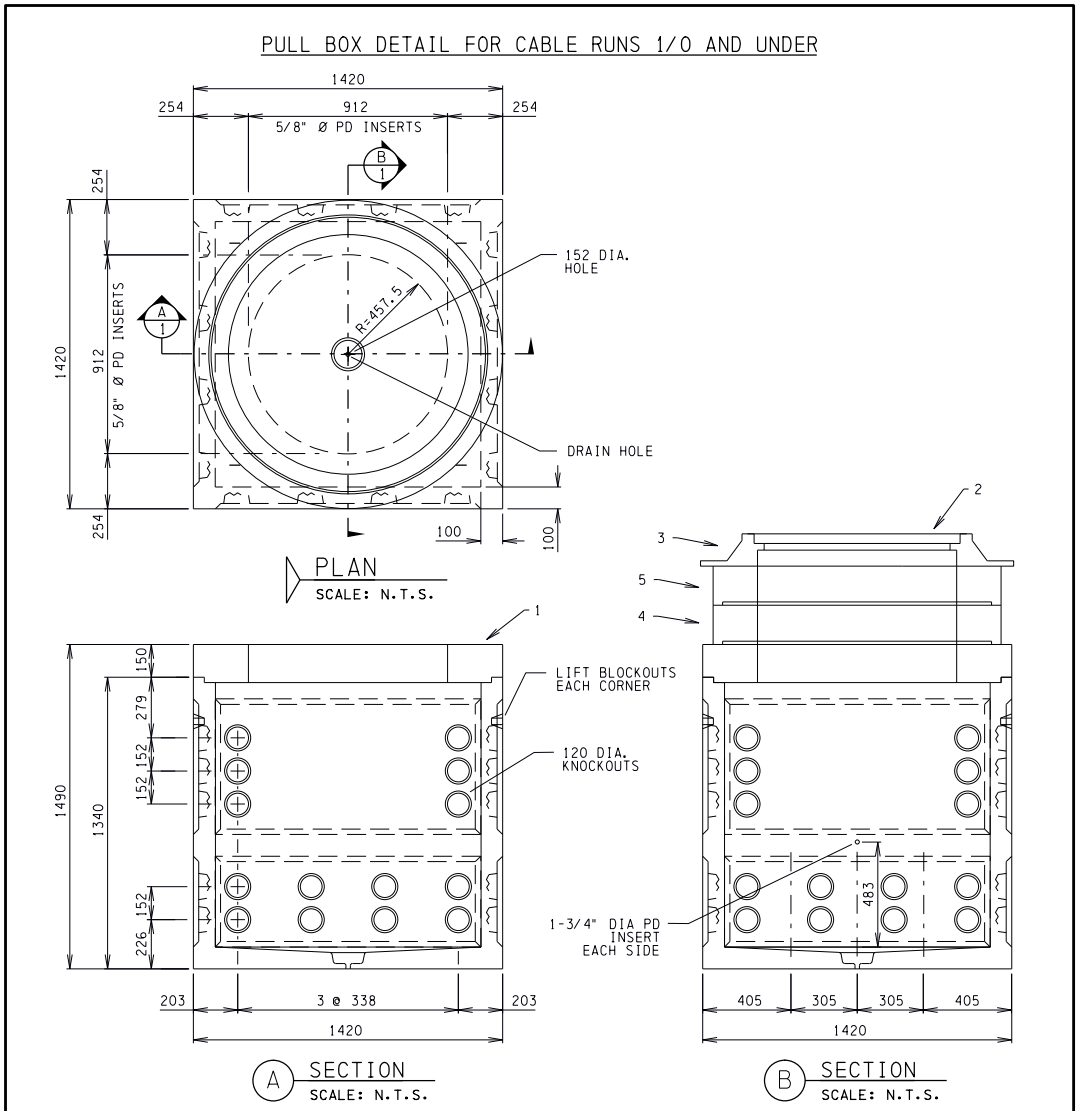

NOTES:

1. PULL BOX WEIGHT: 2,500 kg (5,500 lbs). LID WEIGHT: 750 kg (1650 lbs).
2. INSIDE DIMENSIONS: 1.22 m x 1.22 m x 1.14 m (L x W x H).
3. ONLY USE PULL BOX FOR SPLICES WITH NO EXERNAL NEUTRAL CONNECTIONS AND NO SEPERATE SYSTEM NEUTRAL.

ALL DIMENSIONS IN MILLIMETERS (INCHES) UNLESS OTHERWISE SPECIFIED.

EPCOR APEGGA PERMIT P7061 UNDERGROUND DISTRIBUTION STANDARDS	PROFESSIONAL ENGINEER DAN BUSILAN ALBERTA ORIGINAL SIGNED JUN. 30, 2017	INSTALLATION OF PRECAST CONCRETE 4-WAY PULL BOX
REVIEWED BY STANDARDS COMMITTEE: 2017-05-26		STANDARD NO. 65 00 07 00 35 101 / PAGE NO. 1/ 5
DRAFTED BY: R. LAWRIE		
DESIGNED BY: M. MIX		
SCALE: N.T.S.		
DATE REVISED: 2017-06-16		

* Pages 2 and 4 have been excluded from standards as they do not apply to Customer installations.

DRAWING 6.1

Δ INSTALLATION OF PRECAST CONCRETE 4-WAY PULL BOX PAGE 3/5* (SIZE SMALL AS INDICATED IN TABLE 6.1)

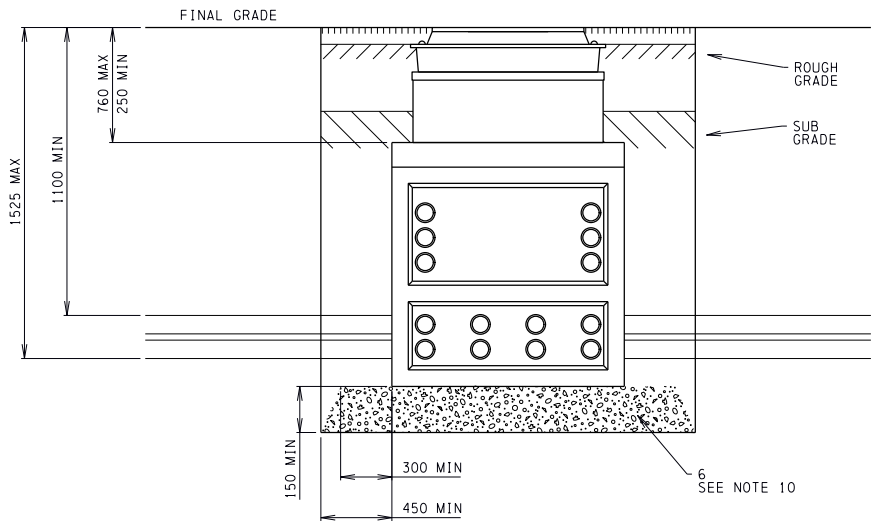

1/0 PULL BOX INSTALLATION
SCALE: N.T.S.

NOTES CONT'D:

5. COMMUNICATIONS CABLES CANNOT SHARE A PULL BOX WITH PRIMARY CABLE.
6. CONDUITS MUST ENTER AND EXIT THE PULL BOX AT THE SAME LEVEL.
7. MANHOLE LID MUST HAVE THE WORD "POWER" ON THE LID.
8. EXCAVATION AND SLOPING REQUIREMENTS SHALL BE AS PER ALBERTA OH&S EXCAVATING AND TUNNELING REGULATIONS.
9. ACCEPTABLE BACKFILL SHALL BE NATIVE SOIL, CLAY, FILLCRETE, SAND, OR GRAVEL. NATIVE SOIL IS UNSUITABLE IF IT IS PEAT, ROOTS, STUMPS, BOULDERS, TOPSOIL, FROZEN SOIL, OR GARBAGE. CONTACT EPCOR ENVIRONMENTAL DEPARTMENT FOR PROPER DISPOSAL PROCEDURES.
10. THE GRANULAR BASE LAYER UNDER THE PULL BOX SHALL BE INSTALLED IN 150 mm HORIZONTAL LIFTS, EACH COMPACTED TO A MINIMUM OF 95% AS PER STANDARD PROCTOR DENSITY TEST. MUDSLABS (20 MPa, SULPHATE RESISTANT, 5-8% AIR ENTRAINMENT BY VOLUME) ARE AN ACCEPTABLE ALTERNATIVE IN SOFT SOIL CONDITIONS.
11. MAXIMUM NUMBER OF (3 CONDUCTOR) CABLE RUNS SHALL BE:
    2 - FOR 1/0 & UNDER PULL BOX
    4 - FOR 750 MCM & UNDER PULL BOX

ALL DIMENSIONS IN MILLIMETERS (INCHES) UNLESS OTHERWISE SPECIFIED.

EPCOR APEGGA PERMIT P7061 UNDERGROUND DISTRIBUTION STANDARDS	PROFESSIONAL ENGINEER DAN BUSILAN ALBERTA ORIGINAL SIGNED JUN. 30, 2017	INSTALLATION OF PRECAST CONCRETE 4-WAY PULL BOX
REVIEWED BY STANDARDS COMMITTEE: 2017-05-26		
DRAFTED BY: R. LAWRIE		
DESIGNED BY: M. MIX		
SCALE: N.T.S.		STANDARD NO. 65 00 07 00 35 101 / PAGE NO. 3/ 5
DATE REVISED: 2017-06-16		

* Pages 2 and 4 have been excluded from standards as they do not apply to Customer installations.

DRAWING 6.1

Δ INSTALLATION OF PRECAST CONCRETE 4-WAY PULL BOX PAGE 5/5* (SIZE SMALL AS INDICATED IN TABLE 6.1)

ITEM	PART DESCRIPTION	STOCK No.	QTY.
1	PULL BOX	AS REQ'D	1
	LARGE - FOR CABLE UP TO 750 MCM	15363	
	SMALL - FOR CABLE UP TO 1/0 AWG	80011	
2	COVER MANHOLE LID 36" LARGE	17566	1
3	CAST IRON FRAME 36" ID LARGE	40523	1
4	RISER RING	AS REQ'D	A/R
	36" ID x 2" - PRECAST	14592	
	36" ID x 4" - PRECAST	60204	
	36" ID x 6" - PRECAST	60205	
	36" ID x 12" - PRECAST	60206	
	38" ID (46" OD) x 0.5" - RUBBER COMPOSITE	15187	
	38" ID (46" OD) x 1.0" - RUBBER COMPOSITE	15192	
	38" ID (49" OD) x 0.5" TO 1.0" TAPERED - RUBBER COMPOSITE	15191	
	36" ID x 1" TO 2" TAPERED - CAST IRON	61595	
5	ADAPTER RING 36" ID x 4" FLAT TOP - PRECAST	60203	1
6	ROAD CRUSH	N/A	A/R

EPCOR
APEGGA PERMIT P7061
UNDERGROUND DISTRIBUTION STANDARDS

REVIEWED BY STANDARDS COMMITTEE:	2017-05-26
DRAFTED BY:	R. LAWRIE
DESIGNED BY:	M. MIX
SCALE:	N.T.S.
DATE REVISED:	2017-06-16

PROFESSIONAL ENGINEER DAN BUSILAN ALBERTA

ORIGINAL SIGNED
JUN. 30, 2017

INSTALLATION OF PRECAST CONCRETE 4-WAY PULL BOX

STANDARD NO. 65 00 07 00 35 101

PAGE NO. 5/ 5

* Pages 2 and 4 have been excluded from standards as they do not apply to Customer installations.

DRAWING 6.2

PRIMARY CABLE, DUCT, AND PULL BOX EXAMPLES FOR EXAMPLES A AND B

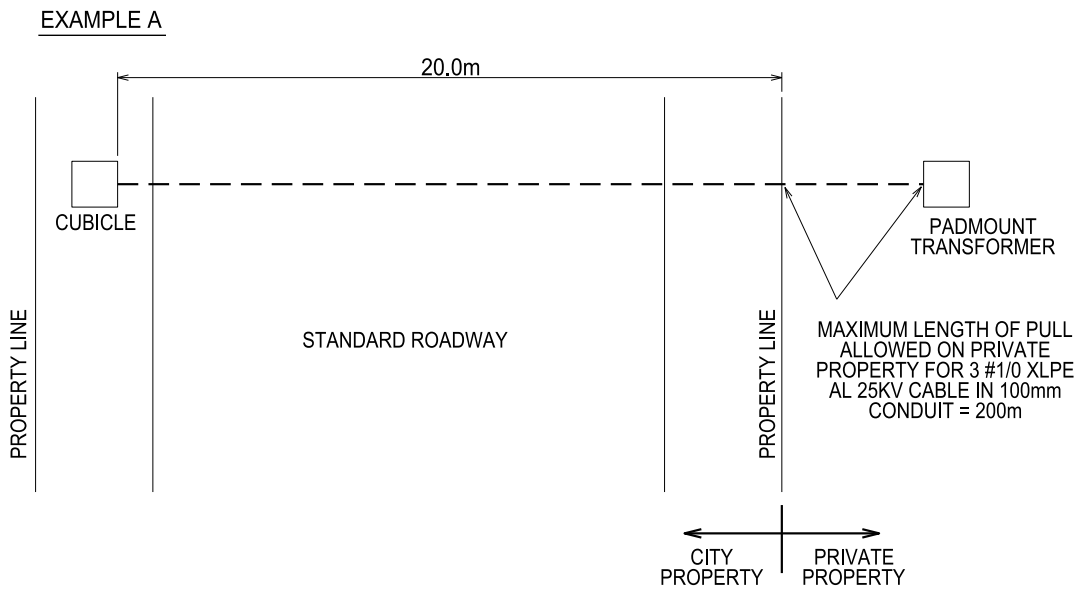

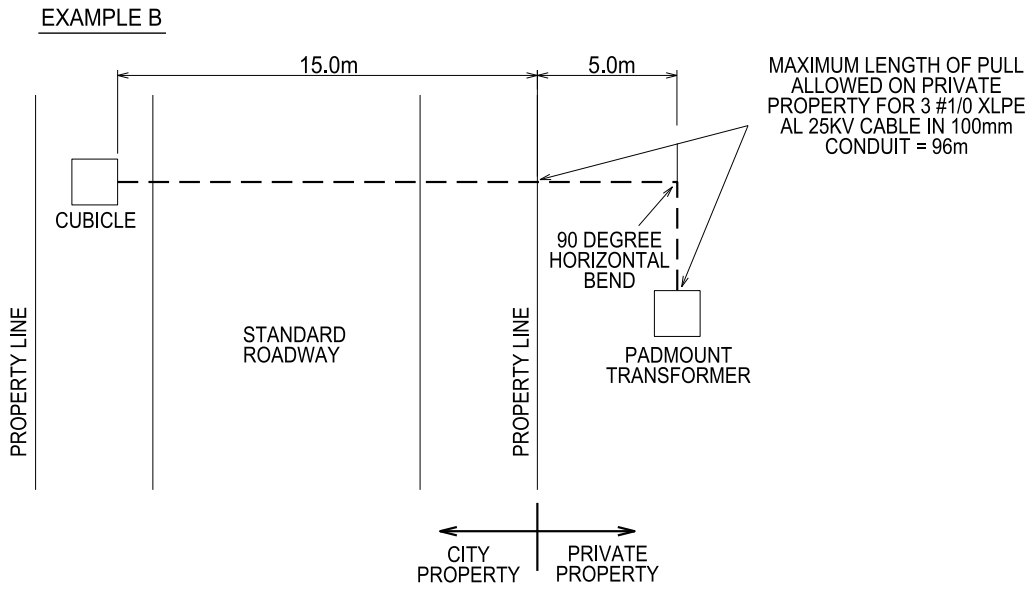

DRAWING 6.3

Δ INSTALLATION OF PRECAST CONCRETE BASE FOR SINGLE PHASE TRANSFORMERS PAGE 1/5*

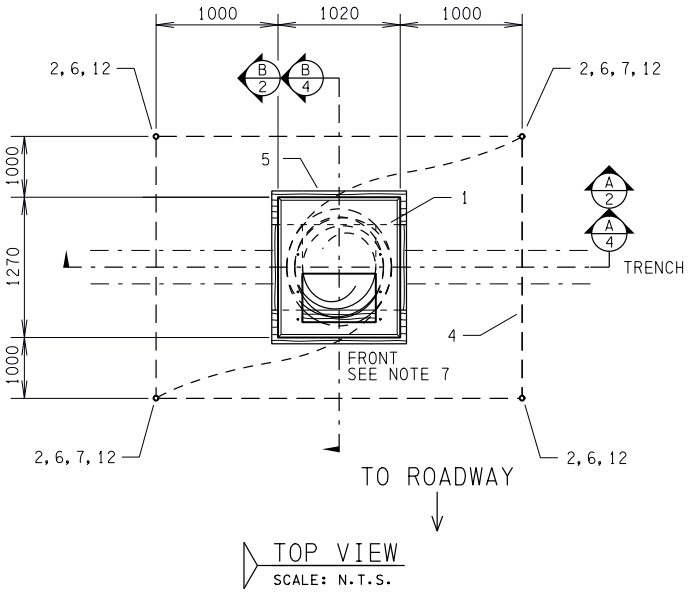

NOTES:

1. INTERCONNECTING GRADIENT CONTROL (GROUND GRID) CONDUCTORS SHALL BE INSTALLED 300 mm BELOW FINAL FINISHED GRADE (NOT ROUGH GRADE) WITH ONE LEG CONTINUOUS AROUND THE PERIMETER AND INTO BASE WITH AN ADDITIONAL CONTINUOUS CONDUCTOR TAIL ATTACHED FROM THE OPPOSITE CORNER.
2. RETAIN 5.0 m OF COILED 4/0 CU PER GROUND CONDUCTOR FOR CONNECTION TO GROUND BUS.
3. ANY REDUCTION IN GROUND GRID SPACING SHALL BE AT THE SOLE DISCRETION OF EDTI ENGINEERING BY WRITTEN APPROVAL ONLY.
4. USE FINE FILL CLAY BACKFILL AROUND GROUND GRID.
5. WHEN SETTING BASE OBSERVE 150 mm MIN. - 200 mm MAX. REQUIREMENT FOR ELEVATION FROM TOP OF BASE TO FINAL FINISHED GRADE (NOT ROUGH GRADE).
6. TYPICAL PUBLIC PROPERTY RESIDENTIAL INSTALLATION IS DIRECT BURIED.
7. IN RESIDENTIAL AREAS IT IS PREFERRED TO HAVE THE FRONT FACING THE ROADWAY.
8. IN DIRECT BURIED APPLICATION, ONCE MOUSEHOLES ARE FULL EXTRA CABLES SHOULD BE ADDED USING CONDUIT AS DEPICTED IN COMMERCIAL/INDUSTRIAL/MULTI-FAMILY APPLICATION VIEWS (SEE PAGE 2). PIPE DUCT (ITEM 3) LENGTH SHALL EXTEND BEYOND GROUND GRID ZONE AS SHOWN.
9. ALL INSTALLATIONS FOR COMMERCIAL/INDUSTRIAL/MULTI-FAMILY AND ON PRIVATE PROPERTY SHALL HAVE ALL CABLING INSTALLED IN CONDUIT.
10. ALL CABLES SHALL HAVE A MINIMUM OF 5.0 m OF EXTRA CABLE COILED IN BASE AS MEASURED FROM THE TOP OF PIPE OR THE BASE ENTRY POINT.
11. THE BASE SHALL BE INSTALLED SUCH THAT THE TOP SURFACE IS LEVEL.
12. BASE WEIGHT: 860 kg (1895 lbs).

ALL DIMENSIONS IN MILLIMETERS (INCHES) UNLESS OTHERWISE SPECIFIED.

EPCOR
APEGA PERMIT P7061
UNDERGROUND DISTRIBUTION STANDARDS

REVIEWED BY STANDARDS COMMITTEE:	2017-12-14
DRAFTED BY:	R. LAWRIE
DESIGNED BY:	A. RAHMAN
SCALE:	N.T.S.
DATE REVISED:	2022-02-08

I confirmed: M65739
PROFESSIONAL ENGINEER CARLO M. RECTO ALBERTA
2022-February-17
PERMIT TO PRACTICE
EPCOR DISTRIBUTION & TRANSMISSION INC
RM SIGNATURE: Catherine Wagner
RM APEGA ID #: 67305
DATE: 2022-02-17
PERMIT NUMBER: P007061
The Association of Professional Engineers and Geoscientists of Alberta (APEGA)

INSTALLATION OF PRECAST CONCRETE BASE FOR SINGLE PHASE TRANSFORMERS

STANDARD NO. 66 00 07 00 27 115

PAGE NO. 1/5

* Page 4 has been excluded from standards as it does not apply to Customer installations.

DRAWING 6.3

Δ INSTALLATION OF PRECAST CONCRETE BASE FOR SINGLE PHASE TRANSFORMERS PAGE 2/5*

COMMERCIAL/INDUSTRIAL/MULTI-FAMILY APPLICATION

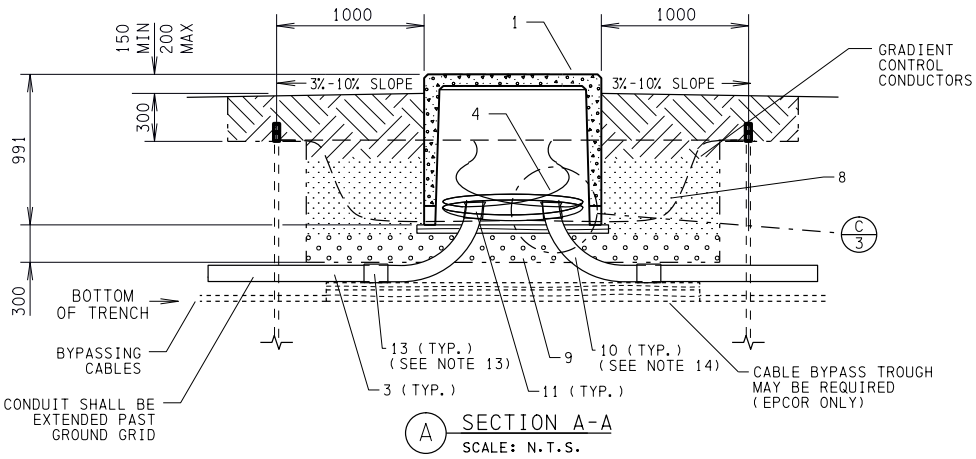

A SECTION A-A
SCALE: N.T.S.

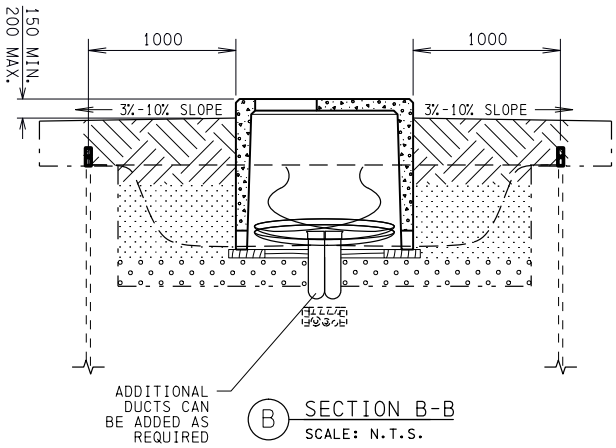

B SECTION B-B
SCALE: N.T.S.

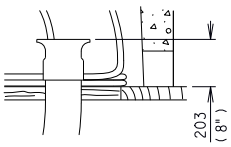

C DETAIL
SCALE: N.T.S.

NOTES CONT'D:

13. ADAPTER COUPLING IS REQUIRED FOR DB2 CONDUIT.
14. ALL PIPES SHALL BE DB2 OR SCHEDULE 40 PVC, CONDUIT BENDS SHALL BE SCHEDULE 40 PVC PIPE. ALL DUCT BENDS SHALL BE 36" RADIUS, ANY OTHER TO BE APPROVED BY EDTI.

ALL DIMENSIONS IN MILLIMETERS (INCHES) UNLESS OTHERWISE SPECIFIED.

EPCOR
APEGA PERMIT P7061
UNDERGROUND DISTRIBUTION STANDARDS

REVIEWED BY STANDARDS COMMITTEE:	2017-12-14
DRAFTED BY:	R. LAWRIE
DESIGNED BY:	A. RAHMAN
SCALE:	N.T.S.
DATE REVISED:	2022-02-08

I confirmed: M65739
PROFESSIONAL ENGINEER CARLO M. RECTO ALBERTA
2022-February-17

PERMIT TO PRACTICE
EPCOR DISTRIBUTION & TRANSMISSION INC
RM SIGNATURE: Catherine Wagner
RM APEGA ID #: 67305
DATE: 2022-02-17
PERMIT NUMBER: P007061
The Association of Professional Engineers and Geoscientists of Alberta (APEGA)

INSTALLATION OF PRECAST CONCRETE BASE FOR SINGLE PHASE TRANSFORMERS

STANDARD NO. 66 00 07 00 27 115

PAGE NO. 2/5

* Page 4 has been excluded from standards as it does not apply to Customer installations.

DRAWING 6.3

Δ INSTALLATION OF PRECAST CONCRETE BASE FOR SINGLE PHASE TRANSFORMERS PAGE 3/5*

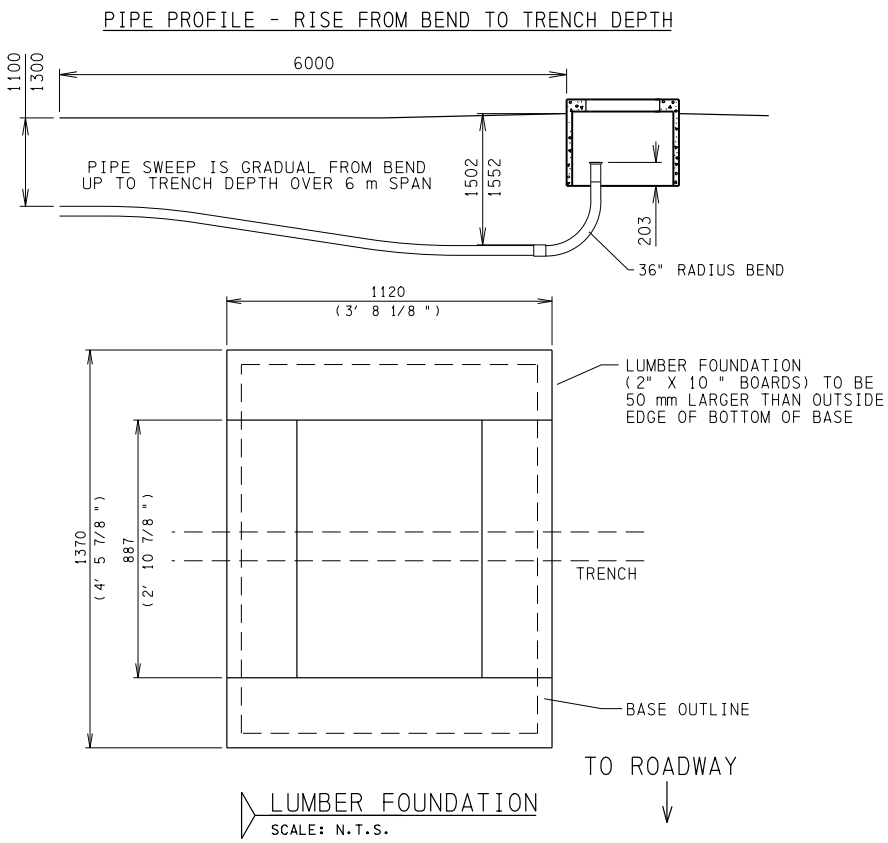

NOTES CONT'D:

15. LUMBER FOUNDATION SHALL BE 2" x 10" PRESSURE TREATED SPRUCE CUT TO 2 - 1120 mm AND 2 - 887 mm LENGTHS (50 mm MAXIMUM LEDGE ON OUTSIDE)
16. RE-TREAT CUT ENDS OF LUMBER FOUNDATION BOARDS WITH COPPER NAPTHANATE WOOD PRESERVATIVE.
17. STEEL REMOVABLE GUARDRAILS WITH CONCRETED STEEL BOLLARD POSTS ARE REQUIRED FOR ALL TRANSFORMERS ON PRIVATE PROPERTY. REFER TO STANDARDS 65 00 07 00 12 500 AND 65 00 07 00 12 502 FOR BOLLARD AND GUARD RAIL CONSTRUCTION.
18. FOR ALL PADMOUNTED EQUIPMENT INSTALLATIONS ON PUBLIC PROPERTY, MECHANICAL PROTECTION SHALL BE CONSIDERED.
19. CONCRETE SHALL BE 25 MPa OR GREATER. ALTERNATE MATERIALS MAY BE ACCEPTABLE.
20. IF THE LOCATION OF THE PRECAST BASE IS WITHIN 4m OF A BUILDING FOUNDATION OR IF SOIL CONDITIONS DO NOT SUPPORT PRECAST BASES, ENGINEERED SCREW PILES MUST BE INSTALLED (REFER TO STANDARD 65 00 07 00 10 400). WHEN SCREW PILES ARE INSTALLED WOOD PLANKS ARE NOT REQUIRED, THE CONCRETE PAD IS TO SIT DIRECTLY ON PILE CAP/PLATE.
21. STEP THE EXCAVATION FOR THE BASE LEAVING A SHELF 300 mm BELOW FINISHED GRADE, ALLOWING FOR THE INSTALLATION OF THE GROUND RODS IN UNDISTURBED CLAY.
22. LEVEL THE FOUNDATION BOARDS ON 300 mm OF COMPACTED ROAD CRUSH BEFORE SETTING THE BASE.
23. SAND 300 mm ABOVE THE MOUSE HOLES AFTER CABLE INSTALLATION.
24. BACKFILL WITH 300 mm LIFTS OF CLAY OR NATIVE SOIL AND COMPACT TO ROUGH GRADE.

ALL DIMENSIONS IN MILLIMETERS (INCHES) UNLESS OTHERWISE SPECIFIED.

EPCOR
APEGA PERMIT P7061
UNDERGROUND DISTRIBUTION STANDARDS

REVIEWED BY STANDARDS COMMITTEE:	2017-12-14
DRAFTED BY:	R. LAWRIE
DESIGNED BY:	A. RAHMAN
SCALE:	N.T.S.
DATE REVISED:	2022-02-08

I confirmed: M65739
PROFESSIONAL ENGINEER CARLO M. RECTO ALBERTA
2022-February-17

PERMIT TO PRACTICE
EPCOR DISTRIBUTION & TRANSMISSION INC
FIRM SIGNATURE: Catherine Wagner
FIRM APEGA ID #: 67305
DATE: 2022-02-17
PERMIT NUMBER: P007061
The Association of Professional Engineers and Geoscientists of Alberta (APEGA)

INSTALLATION OF PRECAST CONCRETE BASE FOR SINGLE PHASE TRANSFORMERS

STANDARD NO. 66 00 07 00 27 115

PAGE NO. 3/5

* Page 4 has been excluded from standards as it does not apply to Customer installations.

DRAWING 6.3

INSTALLATION OF PRECAST CONCRETE BASE FOR SINGLE PHASE TRANSFORMERS PAGE 5/5*

ITEM	PART DESCRIPTION	STOCK No.	QTY.
1	BASE PRECAST TRANSFORMER SINGLE PHASE PADMOUNT 1270 x 1020	62891	1
2	ROD GROUNDING 5/8" x 5'	17288	8
3	PIPE DUCT 4"	AS REQ'D	A/R
	DB2 - 4"	53283	
	RIGID PVC - 4"	10083	
4	WIRE #4/0 STRANDED COPPER BARE	45655	A/R
5	LUMBER SPRUCE PRESSURE-TREATED - 2" x 10" x 8' PWF (RE-TREAT CUT ENDS)	13235	2
6	CONNECTOR GROUND 3/4" ROD - 250 1/C	31914	6
7	CONNECTOR GROUND 3/4" - 250 DOUBLE WIRE	9136	2
8	SAND	N/A	A/R
9	ROAD CRUSH - 20 mm	N/A	A/R
10	BEND RIGID PVC	AS REQ'D	A/R
	4" 90 DEGREE 36" RADIUS PLAIN ENDS - IPEX P/N 069011	22960	
11	END BELL COLLAR - RIGID PVC - 4"	20574	A/R
12	COUPLER - GROUND ROD	17289	4
13	ADAPTER COUPLING 4" DB2 - 4" PVC/FRE	38916	A/R

EPCOR
APEGA PERMIT P7061
UNDERGROUND DISTRIBUTION STANDARDS

REVIEWED BY STANDARDS COMMITTEE: 2017-12-14
DRAFTED BY: R. LAWRIE
DESIGNED BY: A. RAHMAN
SCALE: N.T.S.
DATE REVISED: 2022-02-08

I confirmed: M65739
PROFESSIONAL ENGINEER CARLO M. RECTO ALBERTA
2022-February-17

PERMIT TO PRACTICE
EPCOR DISTRIBUTION & TRANSMISSION INC
RM SIGNATURE: Catherine Dagnau
RM APEGA I.D #: 67305
DATE: 2022-02-17
PERMIT NUMBER: P007061
The Association of Professional Engineers and Geoscientists of Alberta (APEGA)

INSTALLATION OF PRECAST CONCRETE BASE FOR SINGLE PHASE TRANSFORMERS

STANDARD NO. 66 00 07 00 27 115
PAGE NO. 5/5

* Page 4 has been excluded from standards as it does not apply to Customer installations.

DRAWING 6.4

Δ INSTALLATION OF PRECAST CONCRETE BASE FOR THREE PHASE TRANSFORMERS PAGE 1/5

BASE AND DUCTING DETAILS FOR 75 TO 500 kVA TRANSFORMERS

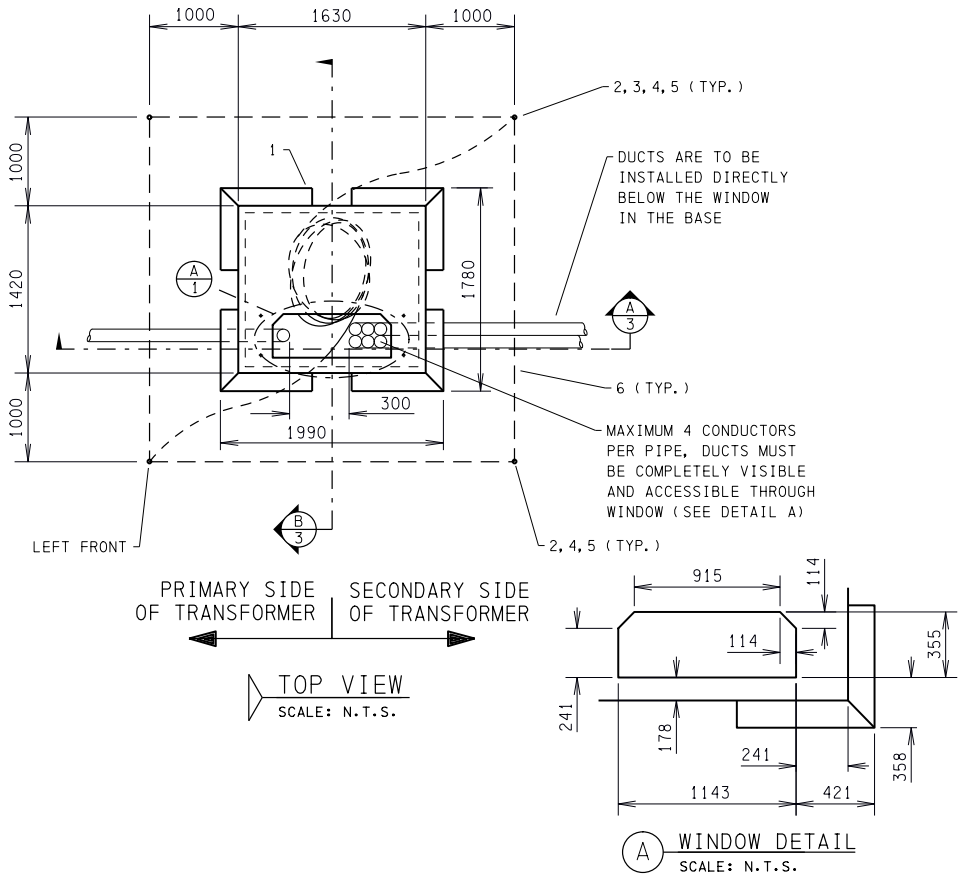

NOTES FOR 75 TO 500 kVA TRANSFORMER BASES:

1. WHEN SETTING BASE, OBSERVE 250 mm MINIMUM AND 300 mm MAXIMUM REQUIREMENT FOR ELEVATION FROM TOP OF BASE TO FINISHED GRADE (NOT ROUGH GRADE).
2. ENSURE 5.0 m OF 4/0 Cu IS COILED IN BASE FOR EACH GRADIENT CONTROL CONNECTION TO GROUND BUS.
3. ANY REDUCTION IN GROUND GRID SPACING SHALL BE AT THE SOLE DISCRETION OF EDTI ENGINEERING BY WRITTEN APPROVAL ONLY.
4. ANY CONTRACTOR SUPPLIED BASES SHOULD BE CONSISTENT WITH EPCOR SPECIFICATION.
5. 75 TO 500 kVA TRANSFORMERS CAN ACCOMODATE MAXIMUM 6 CONDUCTORS PER PHASE.
6. ALL CABLES TO HAVE A MINIMUM OF 5 m OF EXTRA LENGTH COILED IN BASE AS MEASURED FROM TOP OF PIPE OR AT CABLE ENTRY POINT.
7. THE BASE SHALL BE INSTALLED SUCH THAT THE TOP SURFACE IS LEVEL.
8. BASE WEIGHT: 1800 kg (3970 lbs).
   BASE HEIGHT: 1000 mm (39.4 in).

ALL DIMENSIONS IN MILLIMETERS (INCHES) UNLESS OTHERWISE SPECIFIED.

EPCOR
APEGA PERMIT P7061
UNDERGROUND DISTRIBUTION STANDARDS

REVIEWED BY STANDARDS COMMITTEE:	2017-05-26
DRAFTED BY:	R. LAWRIE
DESIGNED BY:	A. RAHMAN
SCALE:	N.T.S.
DATE REVISED:	2022-02-17

I confirmed: M65739
PROFESSIONAL ENGINEER CARLO M. RECTO ALBERTA
2022-February-17

PERMIT TO PRACTICE
EPCOR DISTRIBUTION & TRANSMISSION INC
RM SIGNATURE: Catherine Wagner
RM APEGA ID #: 67305
DATE: 2022-02-17
PERMIT NUMBER: P007061
The Association of Professional Engineers and Geoscientists of Alberta (APEGA)

INSTALLATION OF RECAST CONCRETE BASE FOR THREE PHASE TRANSFORMERS

STANDARD NO. 65 00 07 00 27 133

PAGE NO. 1/ 5

DRAWING 6.4

Δ INSTALLATION OF PRECAST CONCRETE BASE FOR THREE PHASE TRANSFORMERS PAGE 2/5

BASE AND DUCTING DETAILS FOR 750 TO 2500 kVA TRANSFORMERS

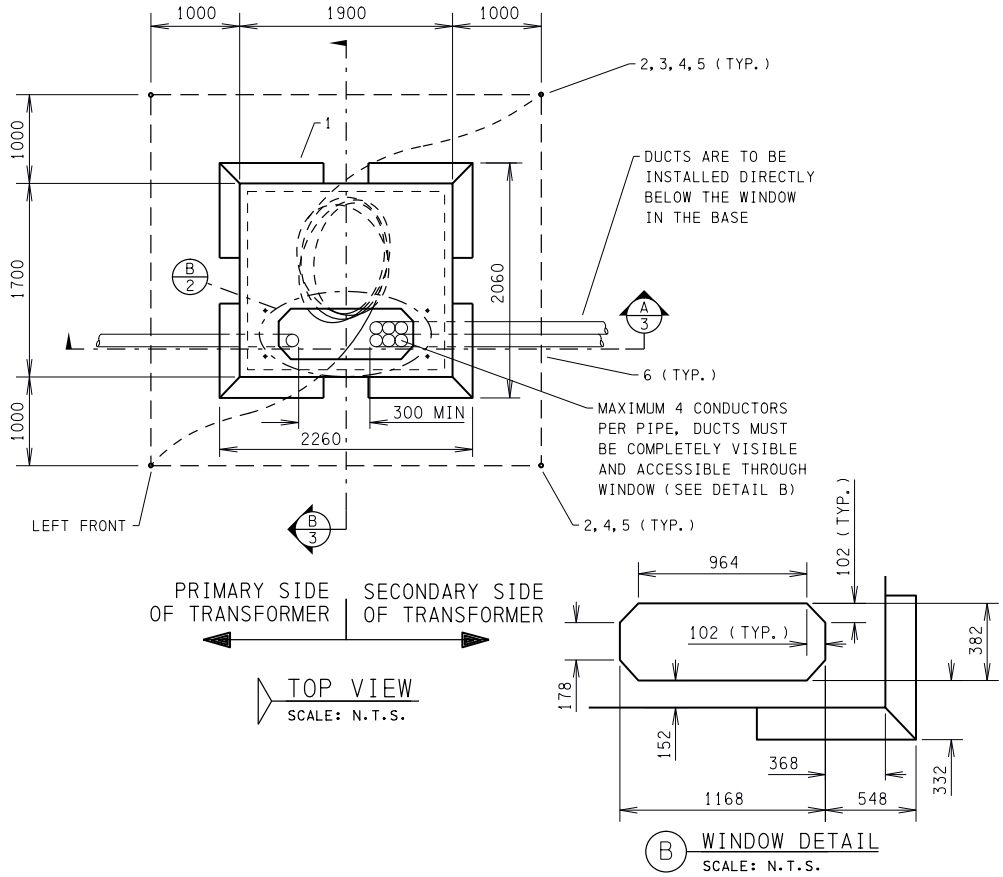

NOTES FOR 750 TO 2500 kVA TRANSFORMER BASES:

1. WHEN SETTING BASE, OBSERVE 250 mm MINIMUM AND 300 mm MAXIMUM REQUIREMENT FOR ELEVATION FROM TOP OF BASE TO FINISHED GRADE (NOT ROUGH GRADE).
2. ENSURE 5.0 m OF 4/0 Cu IS COILED IN BASE FOR EACH GRADIENT CONTROL CONNECTION TO GROUND BUS.
3. ANY REDUCTION IN GROUND GRID SPACING SHALL BE AT THE SOLE DISCRETION OF EDTI ENGINEERING BY WRITTEN APPROVAL ONLY.
4. ANY CONTRACTOR SUPPLIED BASES SHOULD BE CONSISTENT WITH EPCOR SPECIFICATION.
5. 750 TO 1000 kVA TRANSFORMERS CAN ACCOMODATE MAXIMUM 6 CONDUCTORS PER PHASE AND 1500 TO 2500 kVA TRANSFORMERS CAN ACCOMODATE MAXIMUM 8 CONDUCTORS PER PHASE.
6. ALL CABLES TO HAVE A MINIMUM OF 5 m OF EXTRA LENGTH COILED IN BASE AS MEASURED FROM TOP OF PIPE OR AT CABLE ENTRY POINT.
7. THE BASE SHALL BE INSTALLED SUCH THAT THE TOP SURFACE IS LEVEL.
8. BASE WEIGHT: 2520 kg (5555 lbs).
   BASE HEIGHT: 1000 mm (39.4 in).

ALL DIMENSIONS IN MILLIMETERS (INCHES) UNLESS OTHERWISE SPECIFIED

EPCOR
APEGA PERMIT P7061
UNDERGROUND DISTRIBUTION STANDARDS

REVIEWED BY STANDARDS COMMITTEE:	2017-05-26
DRAFTED BY:	R. LAWRIE
DESIGNED BY:	A. RAHMAN
SCALE:	N.T.S.
DATE REVISED:	2022-02-17

I confirmed: M65739
PROFESSIONAL ENGINEER CARLO M. RECTO ALBERTA
2022-February-17

PERMIT TO PRACTICE
EPCOR DISTRIBUTION & TRANSMISSION INC
RM SIGNATURE: Catherine Wagner
RM APEGA ID #: 67305
DATE: 2022-02-17
PERMIT NUMBER: P007061
The Association of Professional Engineers and Geoscientists of Alberta (APEGA)

INSTALLATION OF PRECAST CONCRETE BASE FOR THREE PHASE TRANSFORMERS

STANDARD NO. 65 00 07 00 27 133

PAGE NO. 2/ 5

DRAWING 6.4

Δ INSTALLATION OF PRECAST CONCRETE BASE FOR THREE PHASE TRANSFORMERS PAGE 3/5

BASE AND DUCTING DETAILS FOR 75 TO 500 kVA AND 750-2500 kVA TRANSFORMERS

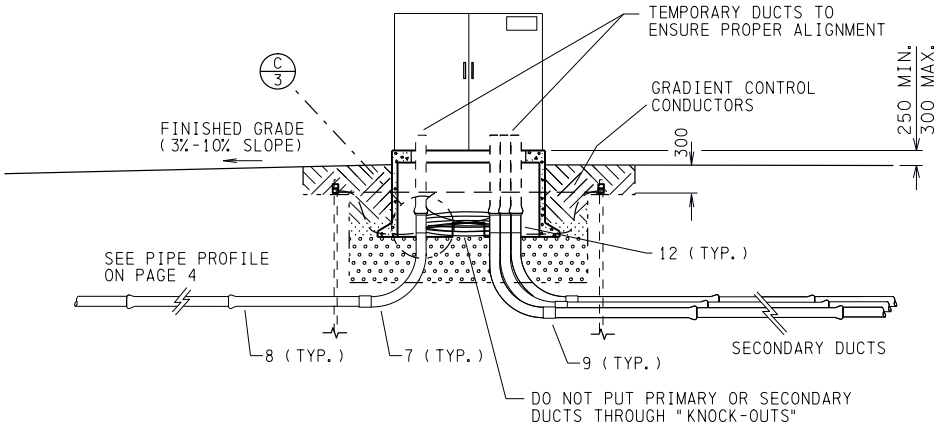

A SECTION
SCALE: N.T.S.

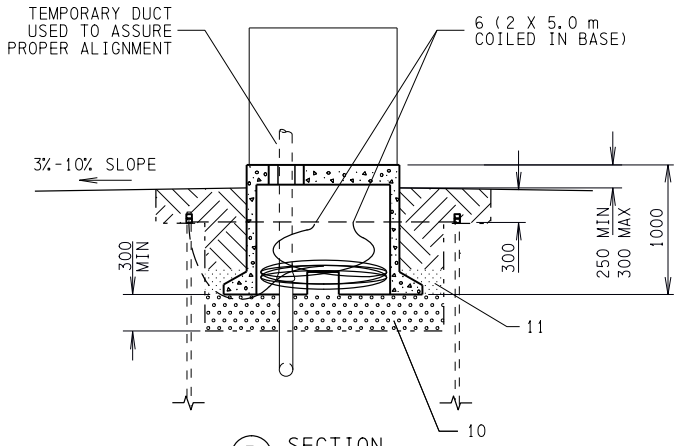

B SECTION
SCALE: N.T.S.

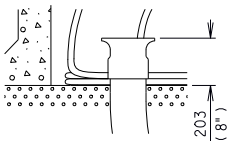

C DETAIL
SCALE: N.T.S.

GENERAL NOTES:

9. MINIMUM PRIMARY CONDUCTOR DUCT SIZES SHALL BE AS PER 63 00 07 00 37 001.
10. MINIMUM SECONDARY CONDUCTOR DUCT SIZES SHALL BE AS PER 63 00 07 00 37 002.
11. 36" RADIUS BENDS ARE REQUIRED FOR ALL DUCT BENDS.
12. COMPACTED SAND SHOULD BE INSTALLED TO TOP OF MOUSE HOLE.

ALL DIMENSIONS IN MILLIMETERS (INCHES) UNLESS OTHERWISE SPECIFIED.

EPCOR
APEGA PERMIT P7061
UNDERGROUND DISTRIBUTION STANDARDS

REVIEWED BY STANDARDS COMMITTEE:	2017-05-26
DRAFTED BY:	R. LAWRIE
DESIGNED BY:	A. RAHMAN
SCALE:	N.T.S.
DATE REVISED:	2022-02-17

I confirmed; M65739
PROFESSIONAL ENGINEER CARLO M. RECTO ALBERTA
2022-February-17

PERMIT TO PRACTICE
EPCOR DISTRIBUTION & TRANSMISSION INC
RM SIGNATURE: Catherine Wagner
RM APEGA ID #: 67305
DATE: 2022-02-17
PERMIT NUMBER: P007061
The Association of Professional Engineers and Geoscientists of Alberta (APEGA)

INSTALLATION OF RECAST CONCRETE BASE FOR THREE PHASE TRANSFORMERS

STANDARD NO. 65 00 07 00 27 133

PAGE NO. 3/ 5

DRAWING 6.4

Δ INSTALLATION OF PRECAST CONCRETE BASE FOR THREE PHASE TRANSFORMERS PAGE 4/5

PIPE PROFILE - RISE FROM BEND TO TRENCH DEPTH

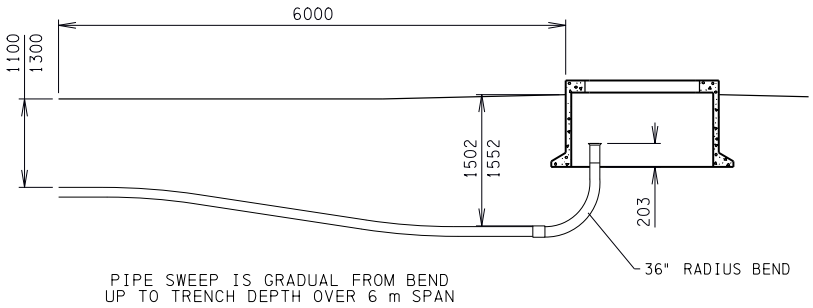

NOTES CONT'D:

13. STEEL REMOVABLE GUARDRAILS WITH FIXED STEEL BOLLARD POSTS ARE REQUIRED FOR ALL TRANSFORMERS ON PRIVATE PROPERTY. SEE STANDARDS 65 00 07 00 12 500 AND 65 00 07 00 12 502 FOR BOLLARD AND GUARD RAIL CONSTRUCTION
14. FOR ALL PADMOUNTED EQUIPMENT INSTALLED ON PUBLIC PROPERTY, MECHANICAL PROTECTION SHALL BE CONSIDERED.
15. CONCRETE SHALL BE 25 MPa OR GREATER. ALTERNATE MATERIALS MAY BE ACCEPTABLE.
16. IF THE LOCATION OF THE PRECAST BASE IS WITHIN 4m OF A BUILDING FOUNDATION OR IF SOIL CONDITIONS DO NOT SUPPORT PRECAST BASES, ENGINEERED SCREW PILES MUST BE INSTALLED (REFER TO STANDARD 65 00 07 00 10 400). WHEN SCREW PILES ARE INSTALLED WOOD PLANKS ARE NOT REQUIRED, THE CONCRETE PAD IS TO SIT DIRECTLY ON PILE CAP/PLATE.

ALL DIMENSIONS IN MILLIMETERS (INCHES) UNLESS OTHERWISE SPECIFIED

EPCOR
APEGA PERMIT P7061
UNDERGROUND DISTRIBUTION STANDARDS

REVIEWED BY STANDARDS COMMITTEE:	2017-05-26
DRAFTED BY:	R. LAWRIE
DESIGNED BY:	A. RAHMAN
SCALE:	N.T.S.
DATE REVISED:	2022-02-17

I confirmed: M65739
PROFESSIONAL ENGINEER CARLO M. RECTO ALBERTA
2022-February-17

PERMIT TO PRACTICE
EPCOR DISTRIBUTION & TRANSMISSION INC
RM SIGNATURE: Catherine Wagner
RM APEGA ID #: 67305
DATE: 2022-02-17
PERMIT NUMBER: P007061
The Association of Professional Engineers and Geoscientists of Alberta (APEGA)

INSTALLATION OF PRECAST CONCRETE BASE FOR THREE PHASE TRANSFORMERS

STANDARD NO. 65 00 07 00 27 133

PAGE NO. 4/ 5

DRAWING 6.4

Δ INSTALLATION OF PRECAST CONCRETE BASE FOR THREE PHASE TRANSFORMERS PAGE 5/5

ITEM	PART DESCRIPTION	STOCK No.	QTY.
1	BASE PRECAST TRANSFORMER	AS REQ'D	1
	75 - 500 kVA CONCRETE	11794	
	750 - 2500 kVA CONCRETE	11636	
2	ROD GROUNDING 5/8" x 5'	17288	8
3	CONNECTOR GROUND ROD 3/4" - 250 DOUBLE WIRE	9136	2
4	CONNECTOR GROUND 3/4" ROD - 250 1/C	31914	6
5	COUPLER - GROUND ROD	17289	4
6	WIRE #4/0 STRANDED COPPER BARE	45655	A/R
7	BEND PVC RIGID	AS REQ'D	A/R
	4" 90 DEGREE 24" RADIUS PLAIN ENDS - FOR EPCOR USE ONLY	44327	
	4" 90 DEGREE 36" RADIUS PLAIN ENDS - IPEX P/N 069011	22960	
	6" 90 DEGREE 36" RADIUS PLAIN ENDS	17787	
8	PIPE DUCT	AS REQ'D	A/R
	DB2 - 4"	53283	
	DB2 - 6"	42236	
	RIGID PVC - 4"	10083	
	RIGID PVC - 6"	10692	
9	COUPLINGS	AS REQ'D	A/R
	4" DB2 - 4" PVC/FRE	38916	
	4" PVC	26695	
	6" DB2 - 6" PVC/FRE	10284	
	6" PVC	34751	
10	ROAD CRUSH - 3/4"	N/A	A/R
11	SAND	N/A	A/R
12	BELL END COLLAR	AS REQ'D	A/R
	RIGID PVC - 4"	20574	
	RIGID PVC - 5"	20731	

EPCOR
APEGA PERMIT P7061
UNDERGROUND DISTRIBUTION STANDARDS

REVIEWED BY STANDARDS COMMITTEE:	2017-05-26
DRAFTED BY:	R. LAWRIE
DESIGNED BY:	A. RAHMAN
SCALE:	N.T.S.
DATE REVISED:	2022-02-17

I confirmed; M65739
PROFESSIONAL ENGINEER CARLO M. RECTO ALBERTA
2022-February-17

PERMIT TO PRACTICE
EPCOR DISTRIBUTION & TRANSMISSION INC
RM SIGNATURE: Catherine Wagner
RM APEGA ID #: 67305
DATE: 2022-02-17
PERMIT NUMBER: P007061
The Association of Professional Engineers and Geoscientists of Alberta (APEGA)

INSTALLATION OF
RECAST CONCRETE BASE
FOR THREE PHASE TRANSFORMERS

STANDARD NO. 65 00 07 00 27 133
PAGE NO. 5/ 5

DRAWING 6.5

Δ INSTALLATION OF PRECAST CONCRETE BASE FOR 4-WAY 15kV SINGLE PHASE 200A DEAD FRONT SWITCHING CUBICLE PAGE 1/5

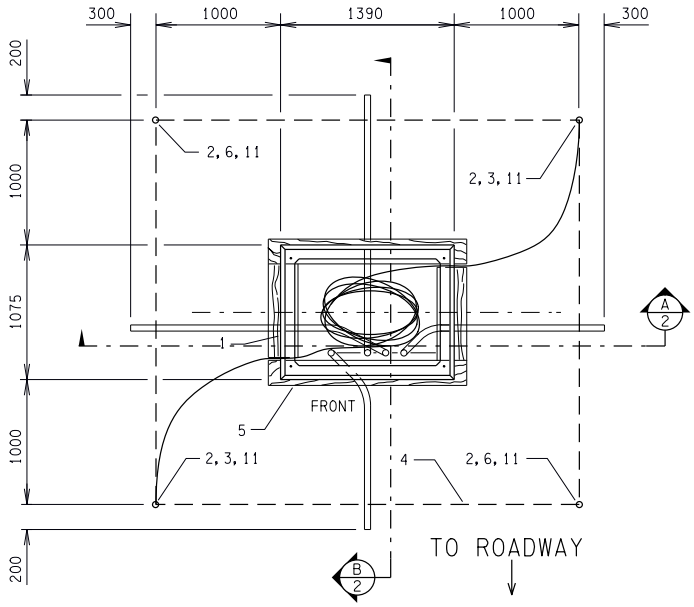

PLAN VIEW
SCALE: N.T.S.

NOTES:

1. INTERCONNECTING GRADIENT CONTROL CONDUCTORS SHALL BE INSTALLED A MINIMUM OF 300 mm BELOW FINAL FINISHED GRADE (NOT ROUGH GRADE) WITH ONE LEG CONTINUOUS AROUND THE PERIMETER AND INTO THE BASE WITH AN ADDITIONAL CONTINUOUS CONDUCTOR TAIL ATTACHED FROM THE OPPOSITE CORNER.
2. ANY REDUCTION IN GROUND GRID SPACING SHALL BE AT THE SOLE DISCRETION OF EDTI ENGINEERING BY WRITTEN APPROVAL ONLY.
3. USE FINE FILL CLAY BACKFILL AROUND GROUND GRID.
4. OBSERVE 250 mm MINIMUM AND 300 mm MAXIMUM REQUIREMENT FOR ELEVATION FROM TOP OF BASE TO FINAL FINISHED GRADE (NOT ROUGH GRADE).
5. CABLES ARE TO BE INSTALLED THROUGH DUCTS ONLY.
6. RETAIN 3.0 m OF COILED 4/0 Cu FOR CONNECTION TO GROUND BUS.
7. THE DUCTING SHOULD BE INSTALLED SO THAT THE ENDS ARE POINTING DIRECTLY UPWARDS WITH THE TOP OF THE END BELL 200 mm ABOVE THE PLANKS/BASE BOTTOM. SPARE DUCTS TO BE CAPPED AND TAPED.
8. ADDITIONAL GROUND ROD MAY BE REQUIRED TO ACHIEVE A RESISTANCE OF 6 OHMS OR LESS.
9. ALL CABLES SHALL HAVE A MINIMUM OF 5 m OF EXTRA CABLE COILED IN THE BASE MEASURED FROM THE TOP OF PIPE OR THE BASE ENTRY POINT.
10. STEEL REMOVABLE GUARDRAILS WITH CONCRETED STEEL BOLLARD POSTS ARE REQUIRED FOR ALL SWITCHING CUBICLES ON PRIVATE PROPERTY. REFER TO STANDARDS 65 00 07 00 12 500 AND 65 00 07 00 12 502 FOR BOLLARD AND GUARD RAIL CONSTRUCTION.
11. FOR ALL PADMOUNTED EQUIPMENT INSTALLED ON PUBLIC PROPERTY, MECHANICAL PROTECTION SHALL BE CONSIDERED.
12. THE BASE SHALL BE INSTALLED SUCH THAT THE TOP SURFACE IS LEVEL.
13. BASE WEIGHT: 1175 kg (2590 lbs).

ALL DIMENSIONS IN MILLIMETERS (INCHES) UNLESS OTHERWISE SPECIFIED.

EPCOR
APEGA PERMIT P7061
UNDERGROUND DISTRIBUTION STANDARDS

REVIEWED BY STANDARDS COMMITTEE:	2017-12-14
DRAFTED BY:	R. LAWRIE
DESIGNED BY:	A. RAHMAN
SCALE:	N.T.S.
DATE REVISED:	2022-02-17

I confirmed; M65739

PROFESSIONAL ENGINEER CARLO M. RECTO ALBERTA

2022-February-17

PERMIT TO PRACTICE
EPCOR DISTRIBUTION & TRANSMISSION INC
RM SIGNATURE: Catherine Wagner
RM APEGA ID #: 67305
DATE: 2022-02-17
PERMIT NUMBER: P007061
The Association of Professional Engineers and Geoscientists of Alberta (APEGA)

INSTALLATION OF PRECAST CONCRETE BASE FOR 4-WAY 15 kV SINGLE PHASE 200 AMP DEADFRONT SWITCHING CUBICLE

STANDARD NO. 66 00 07 15 23 114

PAGE NO. 1/ 5

DRAWING 6.5

Δ INSTALLATION OF PRECAST CONCRETE BASE FOR 4-WAY 15kV SINGLE PHASE 200A DEAD FRONT SWITCHING CUBICLE PAGE 2/5

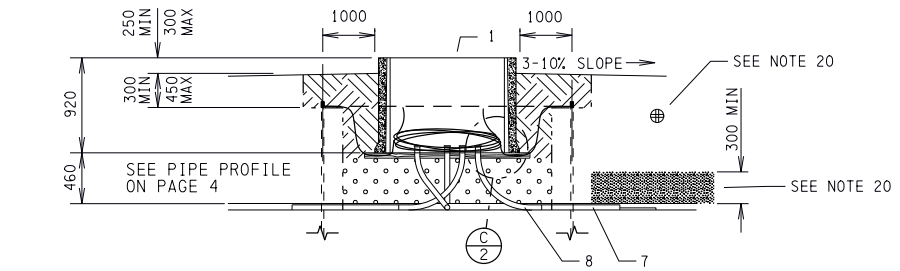

A SECTION
SCALE: N.T.S.

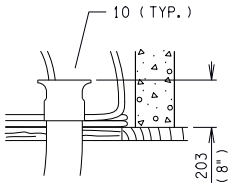

C DETAIL
SCALE: N.T.S.

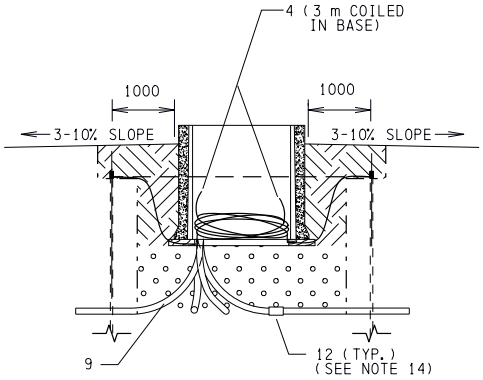

B SECTION
SCALE: N.T.S.

NOTES CONT'D:

14. ADAPTER COUPLING IS REQUIRED FOR DB2 CONDUIT.
15. ALL PIPES SHALL BE DB2 OR SCHEDULE 40 PVC. CONDUIT BENDS SHALL BE SCHEDULE 40 PVC. ALL DUCT BENDS SHALL BE 36" RADIUS, ANY OTHER TO BE APPROVED BY EDTI.

ALL DIMENSIONS IN MILLIMETERS (INCHES) UNLESS OTHERWISE SPECIFIED

EPCOR
APEGA PERMIT P7061
UNDERGROUND DISTRIBUTION STANDARDS

REVIEWED BY STANDARDS COMMITTEE:	2017-12-14
DRAFTED BY:	R. LAWRIE
DESIGNED BY:	A. RAHMAN
SCALE:	N.T.S.
DATE REVISED:	2022-02-17

I confirmed; M65739

PROFESSIONAL ENGINEER CARLO M. RECTO ALBERTA

2022-February-17

PERMIT TO PRACTICE
EPCOR DISTRIBUTION & TRANSMISSION INC
FIRM SIGNATURE:
FIRM APEGA ID #: 67305
DATE: 2022-02-17
PERMIT NUMBER: P007061
The Association of Professional Engineers and Geoscientists of Alberta (APEGA)

INSTALLATION OF PRECAST CONCRETE BASE FOR 4-WAY 15 kV SINGLE PHASE 200 AMP DEADFRONT SWITCHING CUBICLE

STANDARD NO. 66 00 07 15 23 114

PAGE NO. 2/ 5

DRAWING 6.5

Δ INSTALLATION OF PRECAST CONCRETE BASE FOR 4-WAY 15kV SINGLE PHASE 200A DEAD FRONT SWITCHING CUBICLE PAGE 3/5

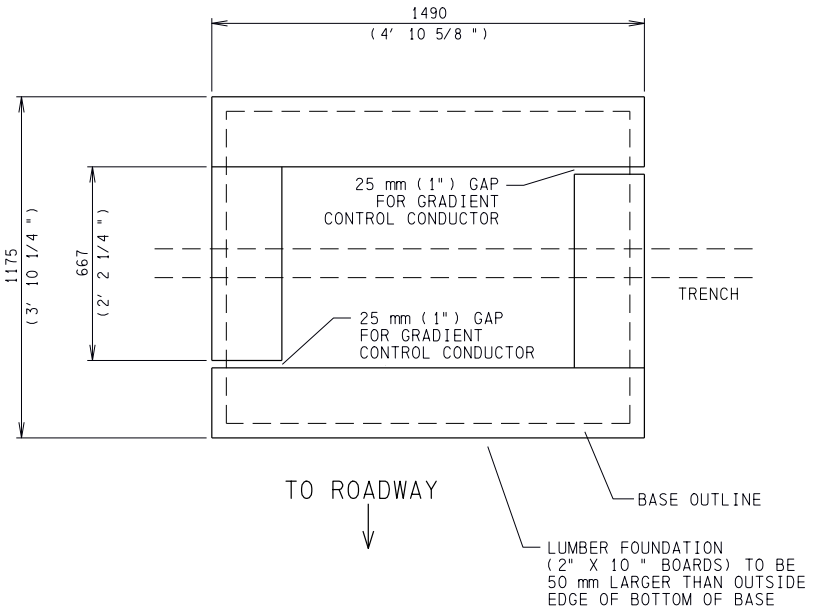

LUMBER FOUNDATION
SCALE: N.T.S.

NOTES CONT'D:

16. LUMBER FOUNDATION TO BE 2" x 10" PRESSURE TREATED SPRUCE WITH 2 - 1490 mm AND 2 - 667 mm LENGTHS (50 mm MAXIMUM LEDGE ON OUTSIDE).
17. RE-TREAT CUT ENDS OF LUMBER FOUNDATION BOARDS WITH COPPER NAPTHANATE WOOD PRESERVATIVE.

ALL DIMENSIONS IN MILLIMETERS (INCHES) UNLESS OTHERWISE SPECIFIED.

EPCOR
APEGA PERMIT P7061
UNDERGROUND DISTRIBUTION STANDARDS

REVIEWED BY STANDARDS COMMITTEE:	2017-12-14
DRAFTED BY:	R. LAWRIE
DESIGNED BY:	A. RAHMAN
SCALE:	N.T.S.
DATE REVISED:	2022-02-17

I confirmed; M65739
PROFESSIONAL ENGINEER CARLO M. RECTO ALBERTA
2022-February-17

PERMIT TO PRACTICE
EPCOR DISTRIBUTION & TRANSMISSION INC
FIRM SIGNATURE: Catherine Wagner
FIRM APEGA ID #: 67305
DATE: 2022-02-17
PERMIT NUMBER: P007061
The Association of Professional Engineers and Geoscientists of Alberta (APEGA)

NSTALLATION OF PRECAST ONCRETE BASE FOR 4-WAY 15 kV SINGLE PHASE 200 AMP DEADFRONT SWITCHING CUBICLE

STANDARD NO. 66 00 07 15 23 114

PAGE NO. 3/ 5

DRAWING 6.5

Δ INSTALLATION OF PRECAST CONCRETE BASE FOR 4-WAY 15kV SINGLE PHASE 200A DEAD FRONT SWITCHING CUBICLE PAGE 4/5

PIPE PROFILE - RISE FROM BEND TO TRENCH DEPTH

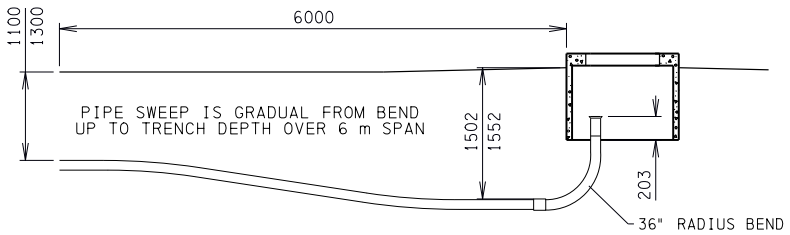

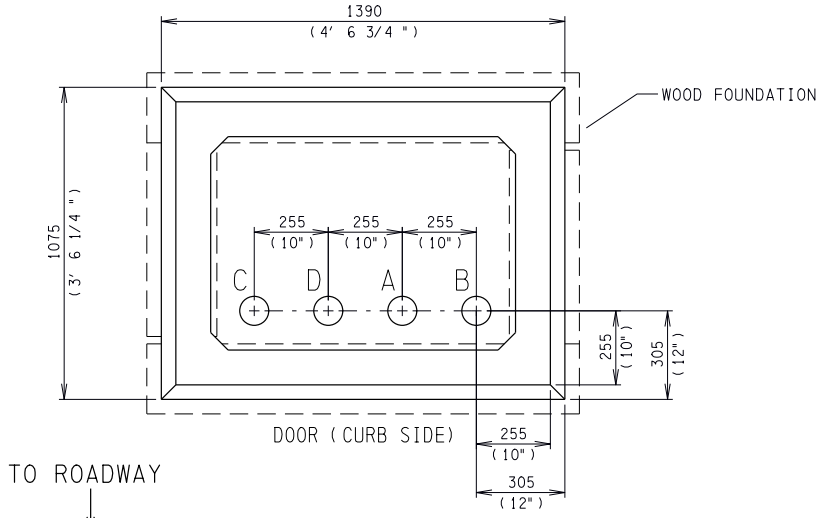

PIPE LOCATIONS
SCALE: N.T.S.

NOTES CONT'D:

18. ALL PIPES SHOULD BE DB2 OR RIGID PVC, BENDS TO BE RIGID PVC.
19. ALL MEASUREMENTS ARE TO THE OUTSIDE "TOP" OF THE BASE.
20. ALL UNUSED CONDUITS SHALL BE CAPPED AND SAND SHADED. MARKER BALLS SHALL BE PLACED AT STUBOUTS FOR ALL SPARE CONDUITS.
21. IF THE LOCATION OF THE PRECAST BASE IS WITHIN 4m OF A BUILDING FOUNDATION OR IF SOIL CONDITIONS DO NOT SUPPORT PRECAST BASES, ENGINEERED SCREW PILES MUST BE INSTALLED (REFER TO STANDARD 65 00 07 00 10 400). WHEN SCREW PILES ARE INSTALLED WOOD PLANKS ARE NOT REQUIRED, THE CONCRETE PAD IS TO SIT DIRECTLY ON PILE CAP/PLATE.

EPCOR ONLY NOTES (NOT FOR INSTALLATION ON PRIVATE PROPERTY)

22. FOR CABLE BYPASS TROUGH REQUIREMENTS AND INSTALLATION SEE DRAWING 66 00 07 00 46 005.
23. DUCT SIZES AS PER STANDARD 63 00 07 00 37 001.

ALL DIMENSIONS IN MILLIMETERS (INCHES) UNLESS OTHERWISE SPECIFIED.

EPCOR APEGA PERMIT P7061 UNDERGROUND DISTRIBUTION STANDARDS	I confirmed: M65739 PROFESSIONAL ENGINEER CARLO M. RECTO ALBERTA 2022-February-17 PERMIT TO PRACTICE EPCOR DISTRIBUTION & TRANSMISSION INC. RM SIGNATURE: Catherine Wagner RM APEGA ID #: 67305 DATE: 2022-02-17 PERMIT NUMBER: P007061 The Association of Professional Engineers and Geoscientists of Alberta (APEGA)	INSTALLATION OF PRECAST CONCRETE BASE FOR 4-WAY 15 kV SINGLE PHASE 200 AMP DEADFRONT SWITCHING CUBICLE
REVIEWED BY STANDARDS COMMITTEE: 2017-12-14		
DRAFTED BY: R. LAWRIE		
DESIGNED BY: A. RAHMAN		
SCALE: N.T.S.		
DATE REVISED: 2022-02-17		STANDARD NO. 66 00 07 15 23 114 / PAGE NO. 4/ 5

DRAWING 6.5

Δ INSTALLATION OF PRECAST CONCRETE BASE FOR 4-WAY 15kV SINGLE PHASE 200A DEAD FRONT SWITCHING CUBICLE PAGE 5/5

ITEM	PART DESCRIPTION	STOCK No.	QTY.
1	BASE PRECAST 200 AMP 15 kV 4-WAY 1 PHASE DEADFRONT SWITCHING CUBICLE	61415	1
2	ROD GROUNDING 5/8" x 5'	17288	8
3	CONNECTOR GROUND ROD 3/4" - 250 DOUBLE WIRE	9136	2
4	WIRE #4/0 STRANDED COPPER BARE	45655	35
5	LUMBER SPRUCE PRESSURE-TREATED - 2" x 10" x 8' PWF (RE-TREAT CUT ENDS)	13235	2
6	CONNECTOR GROUND 3/4" ROD - 250 1/C	31914	2
7	PIPE DUCT 4"	AS REQ'D	A/R
	DB2 - 4"	53283	
	RIGID PVC - 4"	10083	
8	ROAD CRUSH - 3/4"	N/A	A/R
9	BEND RIGID PVC	AS REQ'D	A/R
	4" 90 DEGREE 24" RADIUS PLAIN ENDS - EPCOR USE ONLY	44327	
	4" 90 DEGREE 36" RADIUS PLAIN ENDS - IPEX P/N 069011	22960	
10	END BELL COLLAR - RIGID PVC - 4"	20574	A/R
11	COUPLER - GROUND ROD	17289	4
12	ADAPTER COUPLING 4" DB2 - 4" PVC/FRE	38916	A/R

EPCOR
APEGA PERMIT P7061
UNDERGROUND DISTRIBUTION STANDARDS

REVIEWED BY STANDARDS COMMITTEE: 2017-12-14
DRAFTED BY: R. LAWRIE
DESIGNED BY: A. RAHMAN
SCALE: N.T.S.
DATE REVISED: 2022-02-17

I confirmed: M65739

PROFESSIONAL ENGINEER CARLO M. RECTO ALBERTA

2022-February-17

PERMIT TO PRACTICE
EPCOR DISTRIBUTION & TRANSMISSION INC
RM SIGNATURE: Catherine Wagner
RM APEGA ID #: 67305
DATE: 2022-02-17
PERMIT NUMBER: P007061
The Association of Professional Engineers and Geoscientists of Alberta (APEGA)

NSTALLATION OF PRECAST ONCRETE BASE FOR 4-WAY 15 kV SINGLE PHASE 200 AMP DEADFRONT SWITCHING CUBICLE

STANDARD NO. 66 00 07 15 23 114

PAGE NO. 5/ 5

DRAWING 6.6

Δ INSTALLATION OF PRECAST CONCRETE BASE FOR 4-WAY 25kV SINGLE PHASE 200A DEAD FRONT SWITCHING CUBICLE PAGE 1/5

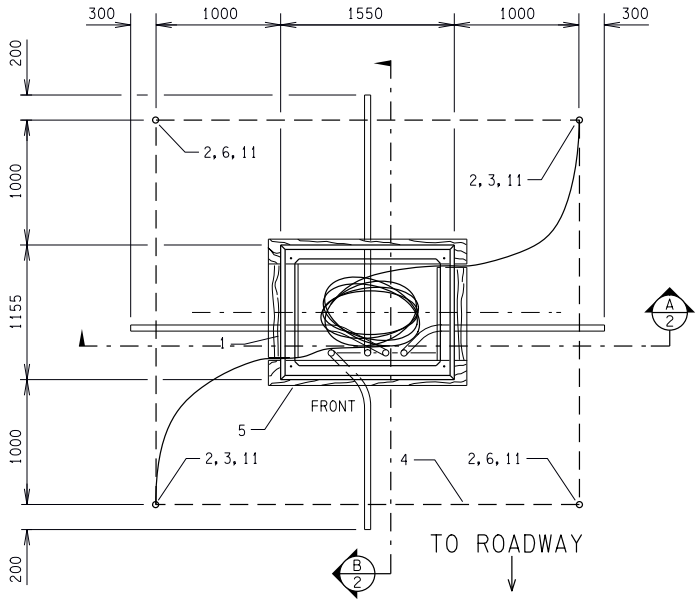

PLAN VIEW
SCALE: N.T.S.

NOTES:

1. INTERCONNECTING GRADIENT CONTROL CONDUCTORS SHALL BE INSTALLED A MINIMUM OF 300 mm BELOW FINAL FINISHED GRADE (NOT ROUGH GRADE) WITH ONE LEG CONTINUOUS AROUND THE PERIMETER AND INTO THE BASE WITH AN ADDITIONAL CONTINUOUS CONDUCTOR TAIL ATTACHED FROM THE OPPOSITE CORNER.
2. ANY REDUCTION IN GROUND GRID SPACING SHALL BE AT THE SOLE DISCRETION OF EDTI ENGINEERING BY WRITTEN APPROVAL ONLY.
3. USE FINE FILL CLAY BACKFILL AROUND GROUND GRID.
4. OBSERVE 250 mm MINIMUM AND 300 mm MAXIMUM REQUIREMENT FOR ELEVATION FROM TOP OF BASE TO FINAL FINISHED GRADE (NOT ROUGH GRADE).
5. CABLES ARE TO BE INSTALLED THROUGH DUCTS ONLY.
6. RETAIN 3.0 m OF COILED 4/0 Cu FOR CONNECTION TO GROUND BUS.
7. THE DUCTING SHOULD BE INSTALLED SO THAT THE ENDS ARE POINTING DIRECTLY UPWARDS WITH THE TOP OF THE END BELL 200 mm ABOVE THE PLANKS/BASE BOTTOM. SPARE DUCTS TO BE CAPPED AND TAPED.
8. ADDITIONAL GROUND ROD MAY BE REQUIRED TO ACHIEVE A RESISTANCE OF 6 OHMS OR LESS.
9. ALL CABLES SHALL HAVE A MINIMUM OF 5 m OF EXTRA CABLE COILED IN THE BASE MEASURED FROM THE TOP OF PIPE OR THE BASE ENTRY POINT.
10. STEEL REMOVABLE GUARDRAILS WITH CONCRETED STEEL BOLLARD POSTS ARE REQUIRED FOR ALL SWITCHING CUBICLES ON PRIVATE PROPERTY. REFER TO STANDARDS 65 00 07 00 12 500 AND 65 00 07 00 12 502 FOR BOLLARD AND GUARD RAIL CONSTRUCTION.
11. FOR ALL PADMOUNTED EQUIPMENT INSTALLATIONS ON PUBLIC PROPERTY, MECHANICAL PROTECTION SHALL BE CONSIDERED.
12. THE BASE SHALL BE INSTALLED SUCH THAT THE TOP SURFACE IS LEVEL.
13. BASE WEIGHT: 1585 kg (3494 lbs).

ALL DIMENSIONS IN MILLIMETERS (INCHES) UNLESS OTHERWISE SPECIFIED.

EPCOR
APEGA PERMIT P7061
UNDERGROUND DISTRIBUTION STANDARDS

REVIEWED BY STANDARDS COMMITTEE:	2017-12-14
DRAFTED BY:	R. LAWRIE
DESIGNED BY:	A. RAHMAN
SCALE:	N.T.S.
DATE REVISED:	2022-02-17

I confirmed: M65739
PROFESSIONAL ENGINEER ALBERTA CARLO M. RECTO
2022-February-17

PERMIT TO PRACTICE
EPCOR DISTRIBUTION & TRANSMISSION INC
FIRM SIGNATURE: Catherine Wagner
FIRM APEGA ID #: 67306
DATE: 2022-02-17
PERMIT NUMBER: P007061
The Association of Professional Engineers and Geoscientists of Alberta (APEGA)

INSTALLATION OF PRECAST CONCRETE BASE FOR 4-WAY 25 kV SINGLE PHASE 200 AMP DEADFRONT SWITCHING CUBICLE

STANDARD NO. 66 00 07 25 23 114

PAGE NO. 1/ 5

DRAWING 6.6

Δ INSTALLATION OF PRECAST CONCRETE BASE FOR 4-WAY 25kV SINGLE PHASE 200A DEAD FRONT SWITCHING CUBICLE PAGE 2/5

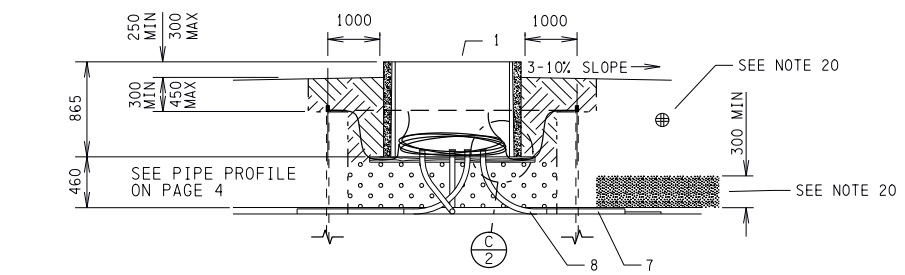

A SECTION
SCALE: N.T.S.

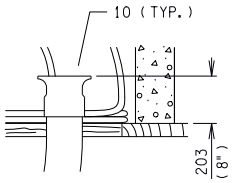

C DETAIL
SCALE: N.T.S.

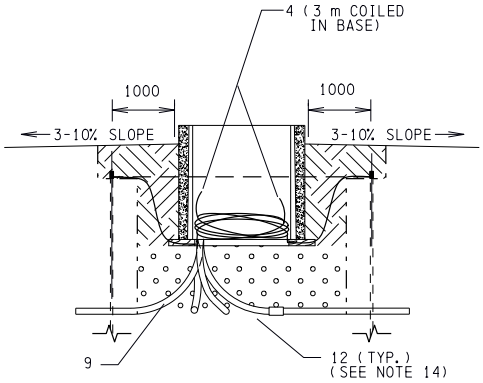

B SECTION
SCALE: N.T.S.

NOTES CONT'D:

14. ADAPTER COUPLING IS REQUIRED FOR DB2 CONDUIT.
15. ALL PIPES SHALL BE DB2 OR SCHEDULE 40 PVC. CONDUIT BENDS SHALL BE SCHEDULE 40 PVC. ALL DUCT BENDS SHALL BE 36" RADIUS, ANY OTHER TO BE APPROVED BY EDTI.

ALL DIMENSIONS IN MILLIMETERS (INCHES) UNLESS OTHERWISE SPECIFIED

EPCOR APEGA PERMIT P7061 UNDERGROUND DISTRIBUTION STANDARDS	I confirmed: M65739 PROFESSIONAL ENGINEER CARLO M. RECTO ALBERTA 2022-February-17 PERMIT TO PRACTICE EPCOR DISTRIBUTION & TRANSMISSION INC RM SIGNATURE: Catherine Wagner RM APEGA ID #: 67305 DATE: 2022-02-17 PERMIT NUMBER: P007061 The Association of Professional Engineers and Geoscientists of Alberta (APEGA)	NSTALLATION OF PRECAST ONCRETE BASE FOR 4-WAY 25 kV SINGLE PHASE 200 AMP DEADFRONT SWITCHING CUBICLE
REVIEWED BY STANDARDS COMMITTEE: 2017-12-14		STANDARD NO. 66 00 07 25 23 114 / PAGE NO. 2/ 5
DRAFTED BY: R. LAWRIE		
DESIGNED BY: A. RAHMAN		
SCALE: N.T.S.		
DATE REVISED: 2022-02-17		

DRAWING 6.6

Δ INSTALLATION OF PRECAST CONCRETE BASE FOR 4-WAY 25kV SINGLE PHASE 200A DEAD FRONT SWITCHING CUBICLE PAGE 3/5

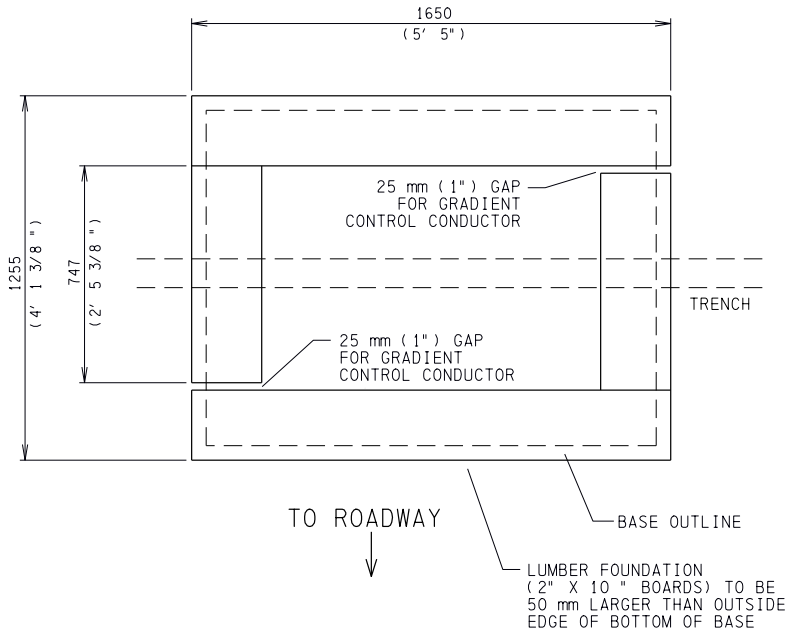

LUMBER FOUNDATION
SCALE: N.T.S.

NOTES CONT'D:

16. LUMBER FOUNDATION TO BE 2" x 10" PRESSURE TREATED SPRUCE WITH 2 - 1490 mm AND 2 - 667 mm LENGTHS (50 mm MAXIMUM LEDGE ON OUTSIDE).
17. RE-TREAT CUT ENDS OF LUMBER FOUNDATION BOARDS WITH COPPER NAPTHANATE WOOD PRESERVATIVE.

ALL DIMENSIONS IN MILLIMETERS (INCHES) UNLESS OTHERWISE SPECIFIED

EPCOR
APEGA PERMIT P7061
UNDERGROUND
DISTRIBUTION STANDARDS

REVIEWED BY STANDARDS COMMITTEE:	2017-12-14
DRAFTED BY:	R. LAWRIE
DESIGNED BY:	A. RAHMAN
SCALE:	N.T.S.
DATE REVISED:	2022-02-17

I confirmed: M65739
PROFESSIONAL ENGINEER CARLO M. RECTO ALBERTA
2022-February-17

PERMIT TO PRACTICE
EPCOR DISTRIBUTION & TRANSMISSION INC
RM SIGNATURE: Catherine Wagner
RM APEGA ID #: 67305
DATE: 2022-02-17
PERMIT NUMBER: P007061
The Association of Professional Engineers and Geoscientists of Alberta (APEGA)

INSTALLATION OF PRECAST CONCRETE BASE FOR 4-WAY 25 kV SINGLE PHASE 200 AMP DEADFRONT SWITCHING CUBICLE

STANDARD NO. 66 00 07 25 23 114

PAGE NO. 3/ 5

DRAWING 6.6

Δ INSTALLATION OF PRECAST CONCRETE BASE FOR 4-WAY 25kV SINGLE PHASE 200A DEAD FRONT SWITCHING CUBICLE PAGE 4/5

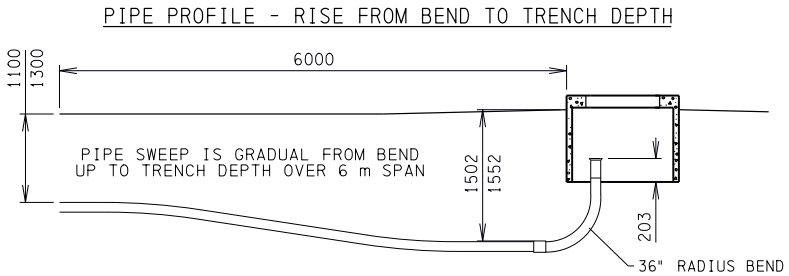

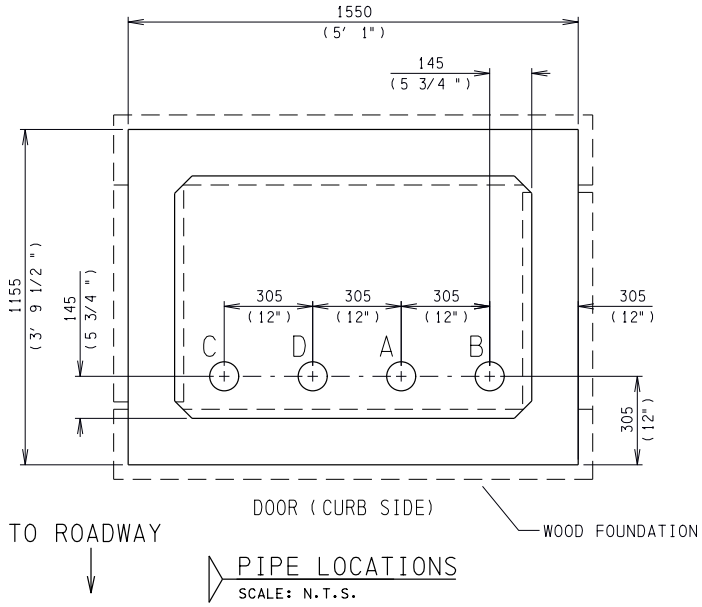

NOTES CONT'D:

18. ALL PIPES SHOULD BE DB2 OR RIGID PVC, BENDS TO BE RIGID PVC.
19. ALL MEASUREMENTS ARE TO THE OUTSIDE "TOP" OF THE BASE.
20. ALL UNUSED CONDUITS SHALL BE CAPPED AND SAND SHADED. MARKER BALLS SHALL BE PLACED AT STUBOUTS FOR ALL SPARE CONDUITS.
21. IF THE LOCATION OF THE PRECAST BASE IS WITHIN 4m OF A BUILDING FOUNDATION OR IF SOIL CONDITIONS DO NOT SUPPORT PRECAST BASES, ENGINEERED SCREW PILES MUST BE INSTALLED (REFER TO STANDARD 65 00 07 00 10 400). WHEN SCREW PILES ARE INSTALLED WOOD PLANKS ARE NOT REQUIRED, THE CONCRETE PAD IS TO SIT DIRECTLY ON PILE CAP/PLATE.

EPCOR ONLY NOTES (NOT FOR INSTALLATION ON PRIVATE PROPERTY)

22. FOR CABLE BYPASS TROUGH REQUIREMENTS AND INSTALLATION SEE DRAWING 66 00 07 00 46 005.
23. DUCT SIZES AS PER STANDARD 63 00 07 00 37 001.

ALL DIMENSIONS IN MILLIMETERS (INCHES) UNLESS OTHERWISE SPECIFIED.

EPCOR APEGA PERMIT P7061 UNDERGROUND DISTRIBUTION STANDARDS	I confirmed: M65739 PROFESSIONAL ENGINEER CARLO M. RECTO ALBERTA 2022-February-17 PERMIT TO PRACTICE EPCOR DISTRIBUTION & TRANSMISSION INC RM SIGNATURE: RM APEGA ID #: 67305 DATE: 2022-02-17 PERMIT NUMBER: P007061 The Association of Professional Engineers and Geoscientists of Alberta (APEGA)	INSTALLATION OF PRECAST CONCRETE BASE FOR 4-WAY 25 kV SINGLE PHASE 200 AMP DEADFRONT SWITCHING CUBICLE
REVIEWED BY STANDARDS COMMITTEE: 2017-12-14		
DRAFTED BY: R. LAWRIE		
DESIGNED BY: A. RAHMAN		
SCALE: N.T.S.		
DATE REVISED: 2022-02-17		STANDARD NO. 66 00 07 25 23 114 / PAGE NO. 4/ 5

DRAWING 6.6

Δ INSTALLATION OF PRECAST CONCRETE BASE FOR 4-WAY 25kV SINGLE PHASE 200A DEAD FRONT SWITCHING CUBICLE PAGE 5/5

ITEM	PART DESCRIPTION	STOCK No.	QTY.
1	BASE PRECAST 200 AMP 25 kV 4-WAY 1 PHASE DEADFRONT SWITCHING CUBICLE	56200	1
2	ROD GROUNDING 5/8" x 5'	17288	8
3	CONNECTOR GROUND ROD 3/4" - 250 DOUBLE WIRE	9136	2
4	WIRE #4/0 STRANDED COPPER BARE	45655	35
5	LUMBER SPRUCE PRESSURE-TREATED - 2" x 10" x 8' PWF (RE-TREAT CUT ENDS)	13235	2
6	CONNECTOR GROUND 3/4" ROD - 250 1/C	31914	2
7	PIPE DUCT 4"	AS REQ'D	A/R
	DB2 - 4"	53283	
	RIGID PVC - 4"	10083	
8	ROAD CRUSH - 3/4"	N/A	A/R
9	BEND RIGID PVC	AS REQ'D	A/R
	4" 90 DEGREE 24" RADIUS PLAIN ENDS - EPCOR USE ONLY	44327	
	4" 90 DEGREE 36" RADIUS PLAIN ENDS - IPEX P/N 069011	22960	
10	END BELL COLLAR - RIGID PVC - 4"	20574	A/R
11	COUPLER - GROUND ROD	17289	4
12	ADAPTER COUPLING 4" DB2 - 4" PVC/FRE	38916	A/R

EPCOR
APEGA PERMIT P7061
UNDERGROUND
DISTRIBUTION STANDARDS

REVIEWED BY STANDARDS COMMITTEE: 2017-12-14
DRAFTED BY: R. LAWRIE
DESIGNED BY: A. RAHMAN
SCALE: N.T.S.
DATE REVISED: 2022-02-17

I confirmed; M65739

PROFESSIONAL ENGINEER CARLO M. RECTO ALBERTA

2022-February-17

PERMIT TO PRACTICE
EPCOR DISTRIBUTION & TRANSMISSION INC
RM SIGNATURE: Catherine Rogers
RM APEGA ID #: 67305
DATE: 2022-02-17
PERMIT NUMBER: P007061
The Association of Professional Engineers and Geoscientists of Alberta (APEGA)

NSTALLATION OF PRECAST
ONCRETE BASE FOR 4-WAY
25 kV SINGLE PHASE 200 AMP
DEADFRONT SWITCHING CUBICLE

STANDARD NO. 66 00 07 25 23 114

PAGE NO. 5/ 5

DRAWING 6.7

Δ INSTALLATION OF PRECAST CONCRETE BASE FOR 4-WAY 3 PHASE 15kV SWITCHING CUBICLE (ALL VARIANTS) PAGE 1/6

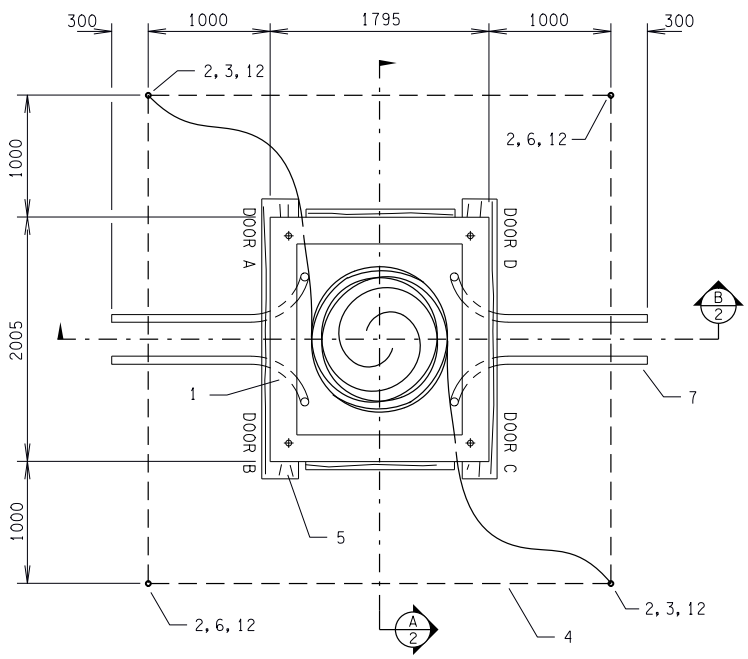

PLAN VIEW
SCALE: N.T.S.

NOTES:

1. INTERCONNECTING GRADIENT CONTROL CONDUCTORS SHALL BE INSTALLED A MINIMUM OF 300 mm BELOW FINAL FINISHED GRADE (NOT ROUGH GRADE) WITH ONE LEG CONTINUOUS AROUND THE PERIMETER AND INTO THE BASE WITH AN ADDITIONAL CONTINUOUS CONDUCTOR TAIL ATTACHED FROM THE OPPOSITE CORNER.
2. ANY REDUCTION IN GROUND GRID SPACING SHALL BE AT THE SOLE DISCRETION OF EDTI ENGINEERING BY WRITTEN APPROVAL ONLY.
3. USE FINE FILL CLAY BACKFILL AROUND GROUND GRID.
4. ENSURE TOP OF BASE IS BETWEEN 250 mm AND 300 mm FROM FINAL FINISHED GRADE (NOT ROUGH GRADE).
5. CABLES ARE TO BE INSTALLED THROUGH DUCTS ONLY.
6. RETAIN 5.0 m OF COILED 4/0 Cu FOR CONNECTION TO GROUND BUS.
7. PRIMARY CABLES ARE TO BE INSTALLED WITH 8 m COILED IN BASE PRIOR TO TERMINATION AND A MINIMUM OF ONE COMPLETE PERIMETER LOOP AFTER TERMINATION.
8. THE DUCTING SHOULD BE INSTALLED SO THAT THE ENDS ARE POINTING DIRECTLY UPWARDS WITH THE TOP OF THE END BELL 200 mm ABOVE THE PLANKS/BASE BOTTOM. SPARE DUCTS TO BE CAPPED AND TAPED.
9. ADDITIONAL GROUND ROD MAY BE REQUIRED TO ACHIEVE A RESISTANCE OF 6 OHMS OR LESS.
10. STEEL REMOVABLE GUARDRAILS WITH CONCRETED STEEL BOLLARD POSTS ARE REQUIRED FOR ALL SWITCHING CUBICLES ON PRIVATE PROPERTY; REFER TO STANDARDS 65 00 07 00 12 500 AND 65 00 07 00 12 502 FOR BOLLARD AND GUARD RAIL CONSTRUCTION
11. FOR ALL PADMOUNTED EQUIPMENT INSTALLATIONS ON PUBLIC PROPERTY, MECHANICAL PROTECTION SHALL BE CONSIDERED.
12. THE BASE SHALL BE INSTALLED SUCH THAT THE TOP SURFACE IS LEVEL.
13. BASE WEIGHT: 2400 kg (5300 lbs).

ALL DIMENSIONS IN MILLIMETERS (INCHES) UNLESS OTHERWISE SPECIFIED.

EPCOR
APEGA PERMIT P7061
UNDERGROUND DISTRIBUTION STANDARDS

REVIEWED BY STANDARDS COMMITTEE:	2017-12-14
DRAFTED BY:	R. LAWRIE
DESIGNED BY:	M. MIX
SCALE:	N.T.S.
DATE REVISED:	2022-02-17

I confirmed; M65739
PROFESSIONAL ENGINEER CARLO M. RECTO ALBERTA
2022-February-17

PERMIT TO PRACTICE
EPCOR DISTRIBUTION & TRANSMISSION INC
FIRM SIGNATURE:
FIRM APEGA ID #: 67305
DATE: 2022-02-17
PERMIT NUMBER: P007061
The Association of Professional Engineers and Geoscientists of Alberta (APEGA)

INSTALLATION OF PRECAST CONCRETE BASE FOR 4-WAY 3 PHASE 15 kV SWITCHING CUBICLE (ALL VARIANTS)

STANDARD NO. 65 00 07 15 23 132
PAGE NO. 1/ 6

DRAWING 6.7

Δ INSTALLATION OF PRECAST CONCRETE BASE FOR 4-WAY 3 PHASE 15kV SWITCHING CUBICLE (ALL VARIANTS) PAGE 2/6

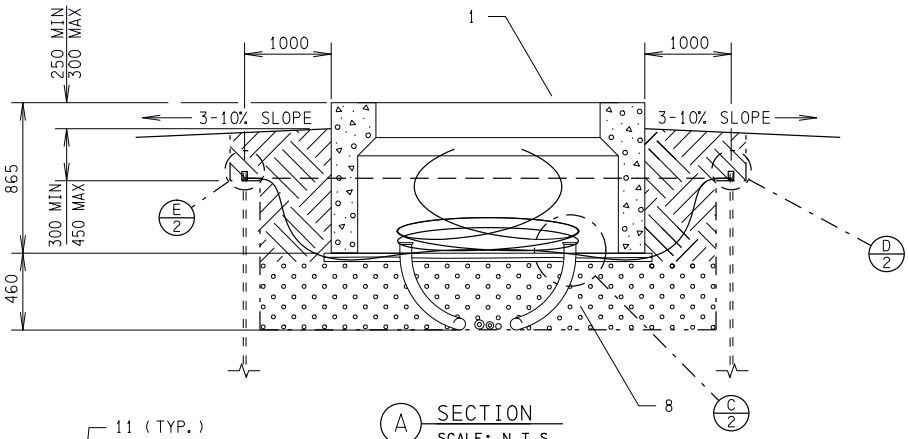

A SECTION
SCALE: N.T.S.

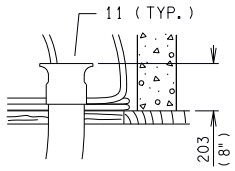

C DETAIL
SCALE: N.T.S.

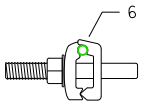

E 1/C CONNECTOR
SCALE: N.T.S.

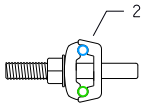

D 2/C CONNECTOR
SCALE: N.T.S.

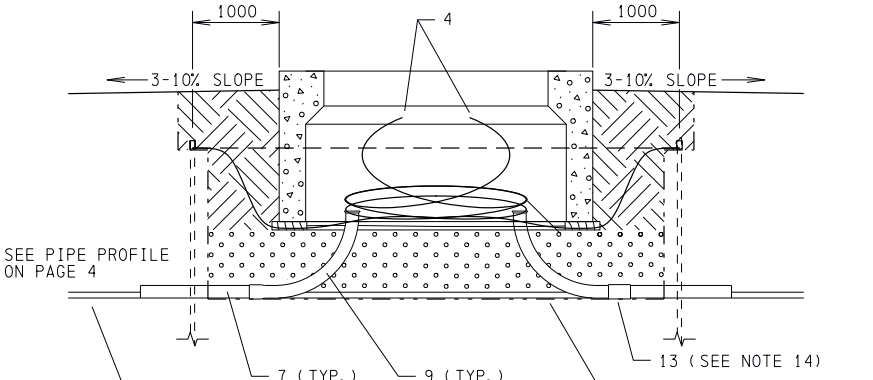

B SECTION
SCALE: N.T.S.

NOTES CONT'D:

14. ADAPTER COUPLING IS REQUIRED FOR DB2 CONDUIT.

ALL DIMENSIONS IN MILLIMETERS (INCHES) UNLESS OTHERWISE SPECIFIED.

EPCOR
APEGA PERMIT P7061
UNDERGROUND
DISTRIBUTION STANDARDS

REVIEWED BY STANDARDS COMMITTEE:	2017-12-14
DRAFTED BY:	R. LAWRIE
DESIGNED BY:	M. MIX
SCALE:	N.T.S.
DATE REVISED:	2022-02-17

I confirmed: M65739

PROFESSIONAL ENGINEER CARLO M. RECTO ALBERTA

2022-February-17

PERMIT TO PRACTICE
EPCOR DISTRIBUTION & TRANSMISSION INC
RM SIGNATURE: Catherine Wagner
RM APEGA ID #: 67305
DATE: 2022-02-17
PERMIT NUMBER: P007061
The Association of Professional Engineers and Geoscientists of Alberta (APEGA)

INSTALLATION OF
ECAST CONCRETE BASE FOR
4-WAY 3 PHASE 15 kV
SWITCHING CUBICLE
(ALL VARIANTS)

STANDARD NO. 65 00 07 15 23 132

PAGE NO. 2/ 6

DRAWING 6.7

Δ INSTALLATION OF PRECAST CONCRETE BASE FOR 4-WAY 3 PHASE 15kV SWITCHING CUBICLE (ALL VARIANTS) PAGE 3/6

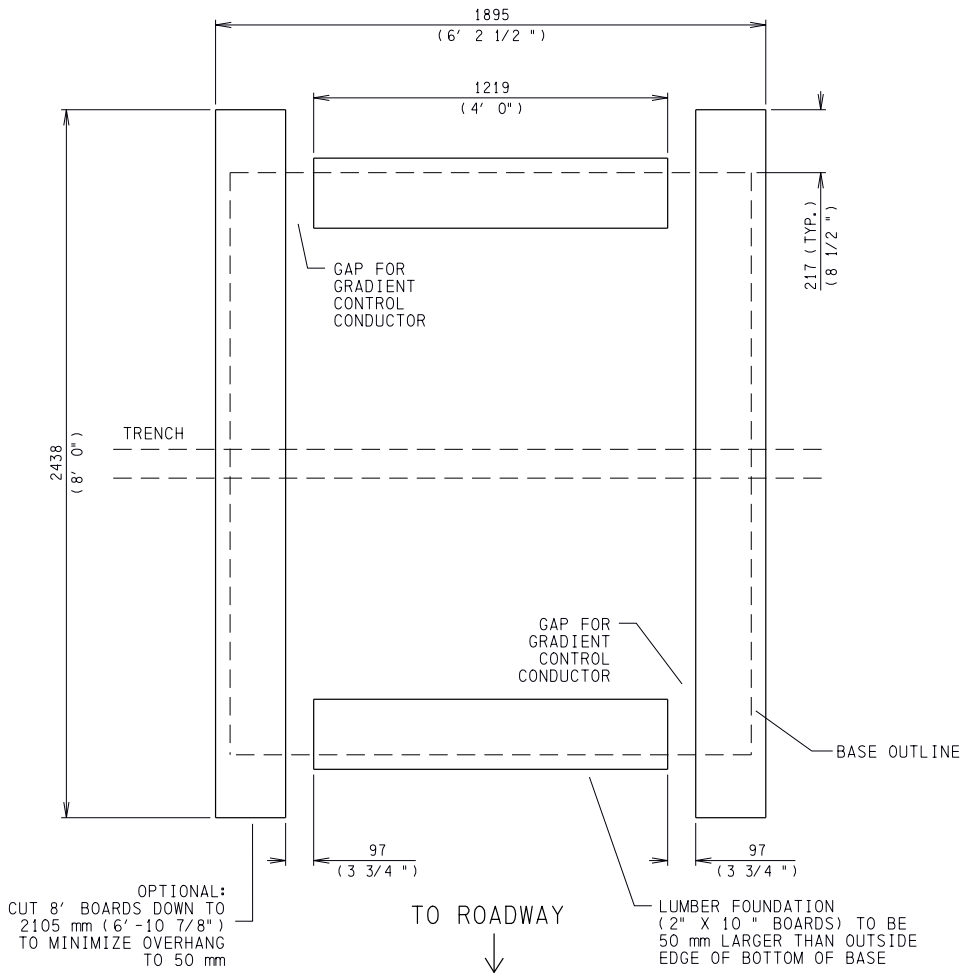

LUMBER FOUNDATION
SCALE: N.T.S.

NOTES CONT'D:

15. LUMBER FOUNDATION SHALL BE 2" x 10" x 8′ PRESSURE TREATED SPRUCE WITH 2 - 2438 mm AND 2 - 1219 mm LENGTHS (50 mm MAXIMUM LEDGE ON OUTSIDE) (RE-TREAT ALL CUT ENDS).
16. RE-TREAT CUT ENDS OF LUMBER FOUNDATION BOARDS WITH COPPER NAPTHANATE WOOD PRESERVATIVE.

ALL DIMENSIONS IN MILLIMETERS (INCHES) UNLESS OTHERWISE SPECIFIED.

EPCOR
APEGA PERMIT P7061
UNDERGROUND
DISTRIBUTION STANDARDS

REVIEWED BY STANDARDS COMMITTEE:	2017-12-14
DRAFTED BY:	R. LAWRIE
DESIGNED BY:	M. MIX
SCALE:	N.T.S.
DATE REVISED:	2022-02-17

I confirmed; M65739
PROFESSIONAL ENGINEER CARLO M. RECTO ALBERTA
2022-February-17

PERMIT TO PRACTICE
EPCOR DISTRIBUTION & TRANSMISSION INC
FIRM SIGNATURE: Catherine Wagner
FIRM APEGA ID #: 67305
DATE: 2022-02-17
PERMIT NUMBER: P007061
The Association of Professional Engineers and Geoscientists of Alberta (APEGA)

INSTALLATION OF
RECAST CONCRETE BASE FOR
4-WAY 3 PHASE 15 kV
SWITCHING CUBICLE
(ALL VARIANTS)

STANDARD NO. 65 00 07 15 23 132

PAGE NO. 3/ 6

DRAWING 6.7

Δ INSTALLATION OF PRECAST CONCRETE BASE FOR 4-WAY 3 PHASE 15kV SWITCHING CUBICLE (ALL VARIANTS) PAGE 4/6

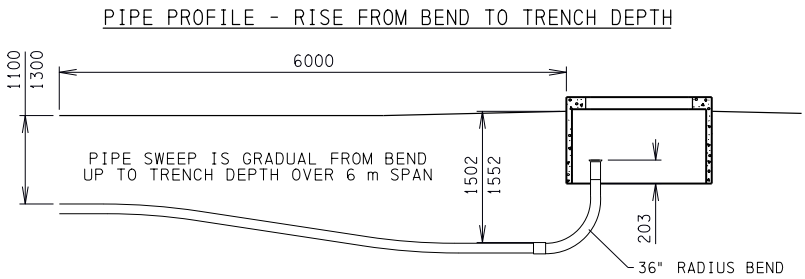

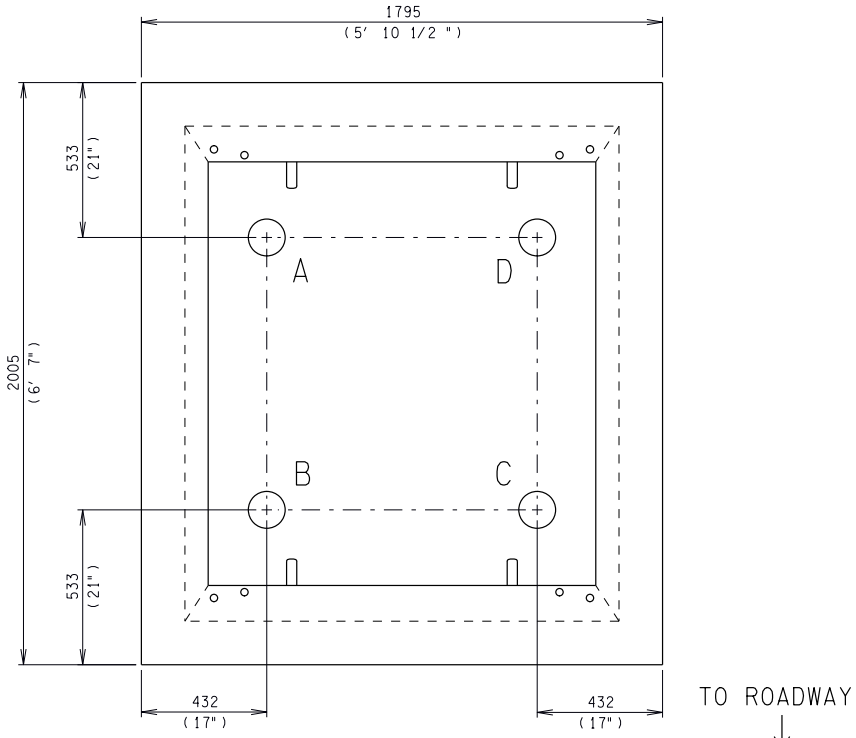

PIPE LOCATIONS
SCALE: N.T.S.

NOTES CONT'D:

17. ALL PIPES SHALL BE DB2 OR SCHEDULE 40 PVC. CONDUIT BENDS SHALL BE SCHEDULE 40 PVC. ALL DUCT BENDS SHALL BE 36" RADIUS, ANY OTHER TO BE APPROVED BY EDTI.
18. ALL MEASUREMENTS ARE TO THE OUTSIDE "TOP" OF THE BASE.

ALL DIMENSIONS IN MILLIMETERS (INCHES) UNLESS OTHERWISE SPECIFIED.

EPCOR APEGA PERMIT P7061 UNDERGROUND DISTRIBUTION STANDARDS	I confirmed; M65739 PROFESSIONAL ENGINEER CARLO M. RECTO ALBERTA 2022-February-17 PERMIT TO PRACTICE EPCOR DISTRIBUTION & TRANSMISSION INC RM SIGNATURE: Catherine Wagner RM APEGA ID #: 67305 DATE: 2022-02-17 PERMIT NUMBER: P007061 The Association of Professional Engineers and Geoscientists of Alberta (APEGA)	INSTALLATION OF PRECAST CONCRETE BASE FOR 4-WAY 3 PHASE 15 kV SWITCHING CUBICLE (ALL VARIANTS)
REVIEWED BY STANDARDS COMMITTEE: 2017-12-14		
DRAFTED BY: R. LAWRIE		
DESIGNED BY: M. MIX		
SCALE: N.T.S.		
DATE REVISED: 2022-02-17		STANDARD NO. 65 00 07 15 23 132 / PAGE NO. 4/ 6

DRAWING 6.7

Δ INSTALLATION OF PRECAST CONCRETE BASE FOR 4-WAY 3 PHASE 15kV SWITCHING CUBICLE (ALL VARIANTS) PAGE 5/6

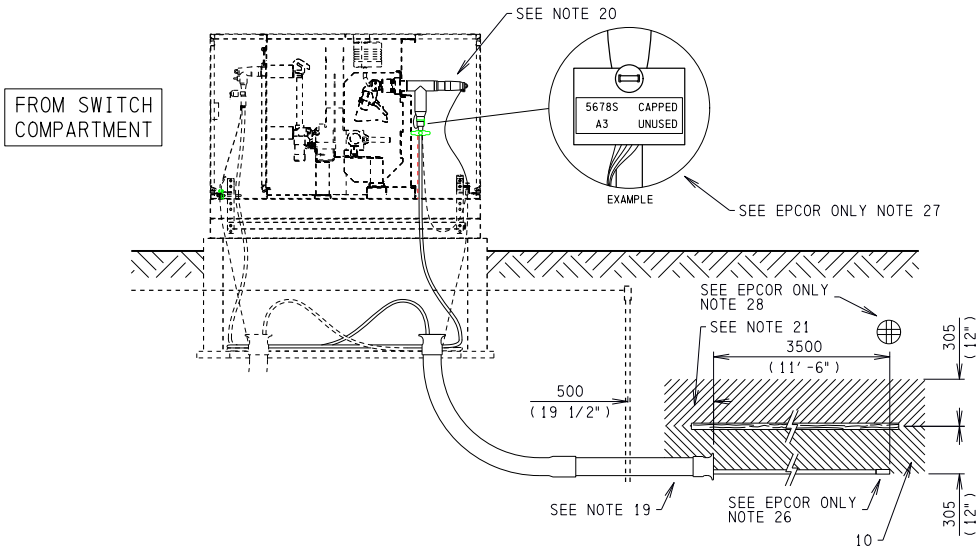

FUTURE PROVISION STUB-OUT
SCALE: N.T.S.

NOTES CONT'D:

19. FOR UNUSED COMPARTMENTS STUB OUT A CONDUIT 500 mm PAST THE GROUND GRID FOR FUTURE PROVISION. MARKER BALLS SHALL BE PLACED AT STUB OUTS FOR ALL SPARE CONDUITS.
20. FOR STUBBED CABLES ORIGINATING FROM SWITCH COMPARTMENTS THE ELBOWS ARE TO BE PLACED ON THE BUSHING WITH THE SWITCH IN THE OFF POSITION AND A LOCK & TAG ON THE SWITCH TO PREVENT OPERATION. THE CABLE NEUTRAL AND TERMINATION GROUND ARE TO BE CONNECTED TO THE GROUND BUS.
21. EXPOSED CABLE TAILS NOT PROTECTED INSIDE CONDUIT OR UNDER A TEMPORARY CONCRETE BASE MUST BE COVERED BY THE FOLLOWING IN ORDER: A 300 mm THICK LAYER OF SAND, 2"×8" (MINIMUM) PRESSURE TREATED PLANKING BUTTED TOGETHER WITHOUT VOIDS OR GAPS, AN ADDITIONAL 300 mm THICK LAYER OF SAND, AND FINALLY BACKFILLED TO GRADE AS PER SECTION A & B ON THIS DRAWING.
22. IF THE LOCATION OF THE PRECAST BASE IS WITHIN 4m OF A BUILDING FOUNDATION OR IF SOIL CONDITIONS DO NOT SUPPORT PRECAST BASES, ENGINEERED SCREW PILES MUST BE INSTALLED (REFER TO STANDARD 65 00 07 00 10 400). WHEN SCREW PILES ARE INSTALLED WOOD PLANKS ARE NOT REQUIRED, THE CONCRETE PAD IS TO SIT DIRECTLY ON PILE CAP/PLATE.

EPCOR NOTES ONLY, NOT FOR INSTALLATION ON PRIVATE PROPERTY:

23. FOR CABLE BYPASS TROUGH REQUIREMENTS AND INSTALLATION SEE DRAWING 66 00 07 00 46 005.
24. DUCT SIZES AS PER STANDARD 63 00 07 00 37 001.
25. THIS PRECAST BASE INSTALLATION STANDARD IS APPLICABLE FOR USE WITH THE FOLLOWING SWITCHING CUBICLE INSTALLATION STANDARDS: 65 00 07 15 23 030, 65 00 07 15 23 031, 65 00 07 15 23 032, 65 00 07 15 23 037, 66 00 07 15 23 035.
26. ENSURE 3.5 m OF CABLE EXTENDS PAST THE END OF THE CONDUIT STUB OUT AND HEAT SHRINK THE CABLE TAIL AS PER 66 00 07 00 48 175.
27. USE CABLE IDENTIFICATION TAG TO INDICATE THE TERMINATED CABLE AS UNUSED AND CAPPED. SEE STANDARD 66 00 07 00 20 001 FOR IDENTIFCATION TAG DETAILS.
28. MARKER BALLS SHALL BE PLACED ABOVE THE CABLE TAIL ENDS. REFER TO STANDARD 63 00 07 00 17 001 OR A PRECAST BASE MAY BE USED AS PER STANDARD 66 00 07 00 48 100.

ALL DIMENSIONS IN MILLIMETERS (INCHES) UNLESS OTHERWISE SPECIFIED.

EPCOR APEGA PERMIT P7061 UNDERGROUND DISTRIBUTION STANDARDS	I confirmed: M65739 PROFESSIONAL ENGINEER CARLO M. RECTO ALBERTA 2022-February-17 PERMIT TO PRACTICE EPCOR DISTRIBUTION & TRANSMISSION INC RM SIGNATURE: Catherine Wagner RM APEGA ID #: 67305 DATE: 2022-02-17 PERMIT NUMBER: P007061 The Association of Professional Engineers and Geoscientists of Alberta (APEGA)	INSTALLATION OF ECAST CONCRETE BASE FOR 4-WAY 3 PHASE 15 kV SWITCHING CUBICLE (ALL VARIANTS)
REVIEWED BY STANDARDS COMMITTEE: 2017-12-14		STANDARD NO. 65 00 07 15 23 132 / PAGE NO. 5/ 6
DRAFTED BY: R. LAWRIE		
DESIGNED BY: M. MIX		
SCALE: N.T.S.		
DATE REVISED: 2022-02-17		

DRAWING 6.7

Δ INSTALLATION OF PRECAST CONCRETE BASE FOR 4-WAY 3 PHASE 15kV SWITCHING CUBICLE (ALL VARIANTS) PAGE 6/6

ITEM	PART DESCRIPTION	STOCK No.	QTY.
1	BASE PRECAST 600 AMP 15 kV 4-WAY 3 PHASE DEADFRONT SWITCHING CUBICLE	17282	1
2	ROD GROUNDING 5/8" x 5' (SEE NOTE 8)	17288	8
3	CONNECTOR GROUND ROD 3/4" - 250 DOUBLE WIRE	9136	2
4	WIRE #4/0 STRANDED COPPER BARE (SEE NOTE 5)	45655	36m
5	LUMBER SPRUCE PRESSURE-TREATED - 2" x 10" x 8' PWF (RE-TREAT CUT ENDS)	13235	3
6	CONNECTOR GROUND 3/4" ROD - 250 1/C	31914	2
7	PIPE DUCT 20 FT.	AS REQ'D	A/R
	DB2 - 4"	53283	
	DB2 - 6"	42236	
	RIGID PVC - 4"	10083	
	RIGID PVC - 6"	10692	
8	ROAD CRUSH - 3/4"	N/A	A/R
9	BENDS RIGID PVC	AS REQ'D	A/R
	4" - 90 DEGREE 36" RADIUS PLAIN ENDS - IPEX P/N 069011	22960	
	6" - 90 DEGREE 36" RADIUS PLAIN ENDS	17787	
10	SAND	N/A	A/R
11	END BELL COLLAR	AS REQ'D	A/R
	RIGID PVC - 4"	20574	
	RIGID PVC - 6"	20889	
12	COUPLER - GROUND ROD	17289	4
13	COUPLING ADAPTER	AS REQ'D	A/R
	4" DB2 TO 4" PVC	38916	
	6" DB2 TO 6" PVC	10284	

EPCOR
APEGA PERMIT P7061
UNDERGROUND DISTRIBUTION STANDARDS

REVIEWED BY STANDARDS COMMITTEE: 2017-12-14
DRAFTED BY: R. LAWRIE
DESIGNED BY: M. MIX
SCALE: N.T.S.
DATE REVISED: 2022-02-17

I confirmed; M65739
PROFESSIONAL ENGINEER CARLO M. RECTO ALBERTA
2022-February-17

PERMIT TO PRACTICE
EPCOR DISTRIBUTION & TRANSMISSION INC
RM SIGNATURE: Catherine Wagner
RM APEGA ID #: 67305
DATE: 2022-02-17
PERMIT NUMBER: P007061
The Association of Professional Engineers and Geoscientists of Alberta (APEGA)

INSTALLATION OF CAST CONCRETE BASE FOR 4-WAY 3 PHASE 15 kV SWITCHING CUBICLE (ALL VARIANTS)

STANDARD NO. 65 00 07 15 23 132
PAGE NO. 6/ 6

DRAWING 6.8

Δ INSTALLATION OF PRECAST CONCRETE BASE FOR 4-WAY 3 PHASE 25kV SWITCHING CUBICLE (ALL VARIANTS) PAGE 1/6

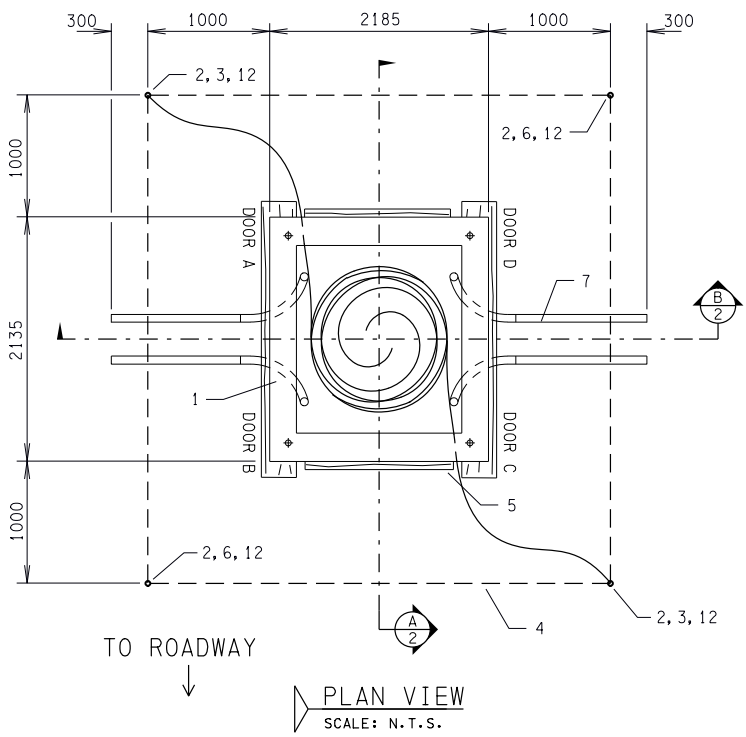

NOTES:

1. INTERCONNECTING GRADIENT CONTROL CONDUCTORS SHALL BE INSTALLED A MINIMUM OF 300 mm BELOW FINAL FINISHED GRADE (NOT ROUGH GRADE) WITH ONE LEG CONTINUOUS AROUND THE PERIMETER AND INTO THE BASE WITH AN ADDITIONAL CONTINUOUS CONDUCTOR TAIL ATTACHED FROM THE OPPOSITE CORNER.
2. ANY REDUCTION IN GROUND GRID SPACING SHALL BE AT THE SOLE DISCRETION OF EDTI ENGINEERING BY WRITTEN APPROVAL ONLY.
3. USE FINE FILL CLAY BACKFILL AROUND GROUND GRID.
4. ENSURE TOP OF BASE IS BETWEEN 250 mm AND 300 mm FROM FINAL FINISHED GRADE (NOT ROUGH GRADE).
5. CABLES ARE TO BE INSTALLED THROUGH DUCTS ONLY.
6. RETAIN 5.0 m OF COILED 4/0 Cu FOR CONNECTION TO GROUND BUS.
7. PRIMARY CABLES ARE TO BE INSTALLED WITH 8 m COILED IN BASE PRIOR TO TERMINATION AND A MINIMUM OF ONE COMPLETE PERIMETER LOOP AFTER TERMINATION.
8. THE DUCTING SHOULD BE INSTALLED SO THAT THE ENDS ARE POINTING DIRECTLY UPWARDS WITH THE TOP OF THE END BELL 200 mm ABOVE THE PLANKS/BASE BOTTOM. SPARE DUCTS TO BE CAPPED AND TAPED.
9. ADDITIONAL GROUND ROD MAY BE REQUIRED TO ACHIEVE A RESISTANCE OF 6 OHMS OR LESS.
10. STEEL REMOVABLE GUARDRAILS WITH CONCRETED STEEL BOLLARD POSTS ARE REQUIRED FOR ALL SWITCHING CUBICLES ON PRIVATE PROPERTY. REFER TO STANDARDS 65 00 07 00 12 500 AND 65 00 07 00 12 502 FOR BOLLARD AND GUARD RAIL CONSTRUCTION.
11. FOR ALL PADMOUNTED EQUIPMENT INSTALLATIONS ON PUBLIC PROPERTY, MECHANICAL PROTECTION SHALL BE CONSIDERED.
12. THE BASE SHALL BE INSTALLED SUCH THAT THE TOP SURFACE IS LEVEL.
13. BASE WEIGHT: 2880 kg (6350 lbs).

ALL DIMENSIONS IN MILLIMETERS (INCHES) UNLESS OTHERWISE SPECIFIED.

EPCOR
APEGA PERMIT P7061
UNDERGROUND DISTRIBUTION STANDARDS

REVIEWED BY STANDARDS COMMITTEE:	2017-12-14
DRAFTED BY:	R. LAWRIE
DESIGNED BY:	M. MIX
SCALE:	N.T.S.
DATE REVISED:	2022-02-17

I confirmed: M65739

PROFESSIONAL ENGINEER CARLO M. RECTO ALBERTA

2022-February-17

PERMIT TO PRACTICE
EPCOR DISTRIBUTION & TRANSMISSION INC.
RM SIGNATURE: Catherine Wagner
RM APEGA ID #: 67305
DATE: 2022-02-17
PERMIT NUMBER: P007061
The Association of Professional Engineers and Geoscientists of Alberta (APEGA)

INSTALLATION OF PRECAST CONCRETE BASE FOR 4-WAY 3 PHASE 25 kV SWITCHING CUBICLE (ALL VARIANTS)

STANDARD NO. 65 00 07 25 23 132

PAGE NO. 1/ 6

DRAWING 6.8

Δ INSTALLATION OF PRECAST CONCRETE BASE FOR 4-WAY 3 PHASE 25kV SWITCHING CUBICLE (ALL VARIANTS) PAGE 2/6

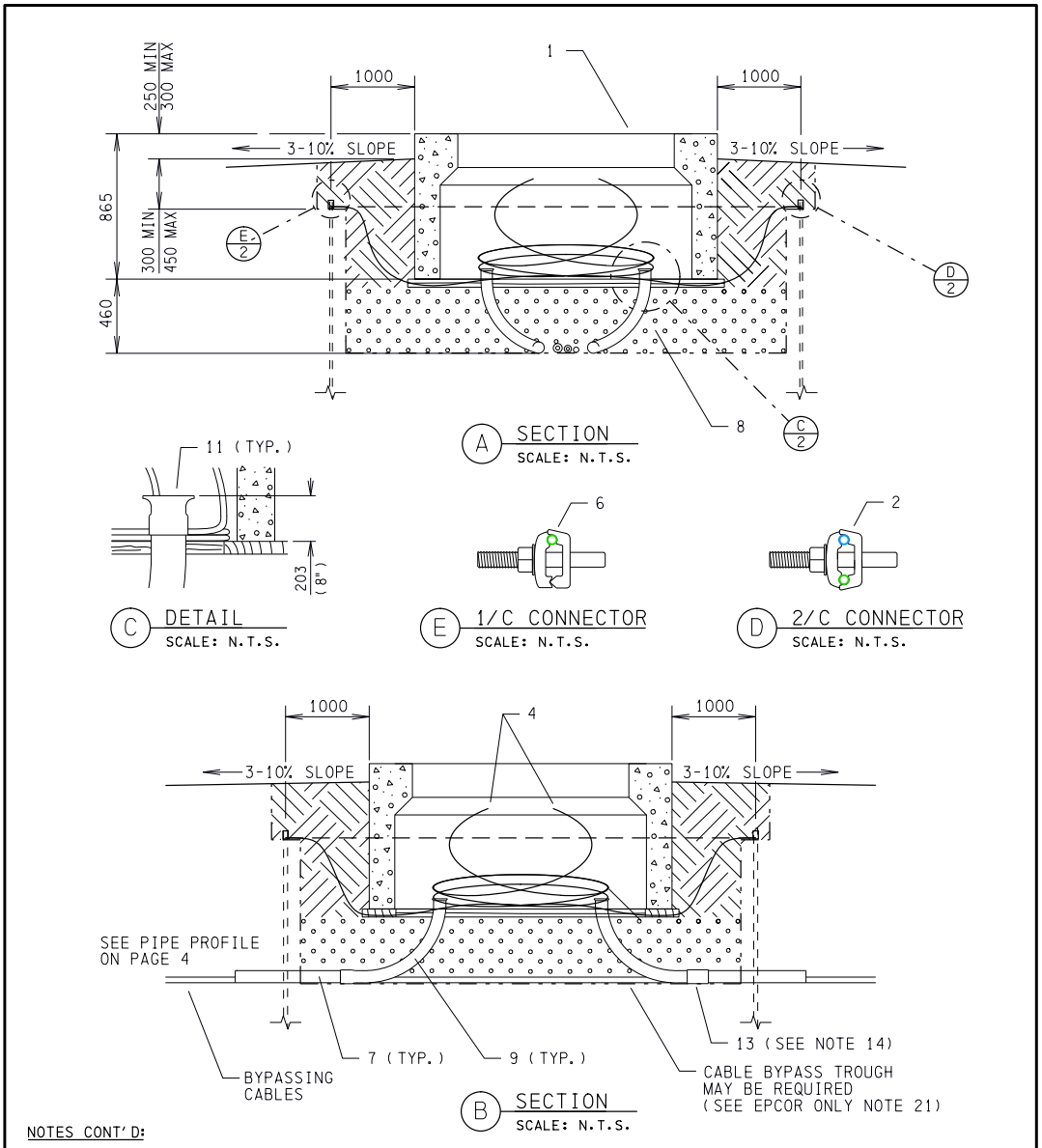

NOTES CONT'D:

14. ADAPTER COUPLING IS REQUIRED FOR DB2 CONDUIT.

ALL DIMENSIONS IN MILLIMETERS (INCHES) UNLESS OTHERWISE SPECIFIED.

EPCOR
APEGA PERMIT P7061
UNDERGROUND
DISTRIBUTION STANDARDS

REVIEWED BY STANDARDS COMMITTEE:	2017-12-14
DRAFTED BY:	R. LAWRIE
DESIGNED BY:	M. MIX
SCALE:	N.T.S.
DATE REVISED:	2022-02-17

I confirmed: M65739

PROFESSIONAL ENGINEER ALBERTA
CARLO M. RECTO

PERMIT TO PRACTICE
EPCOR DISTRIBUTION & TRANSMISSION INC.
RM SIGNATURE: Catherine Wagner
RM APEGA ID #: 67305
DATE: 2022-02-17
PERMIT NUMBER: P007061
The Association of Professional Engineers and Geoscientists of Alberta (APEGA)

2022-February-17

INSTALLATION OF
PRECAST CONCRETE BASE FOR
4-WAY 3 PHASE 25 kV
SWITCHING CUBICLE
(ALL VARIANTS)

STANDARD NO. 65 00 07 25 23 132

PAGE NO. 2/ 6

DRAWING 6.8

Δ INSTALLATION OF PRECAST CONCRETE BASE FOR 4-WAY 3 PHASE 25kV SWITCHING CUBICLE (ALL VARIANTS) PAGE 3/6

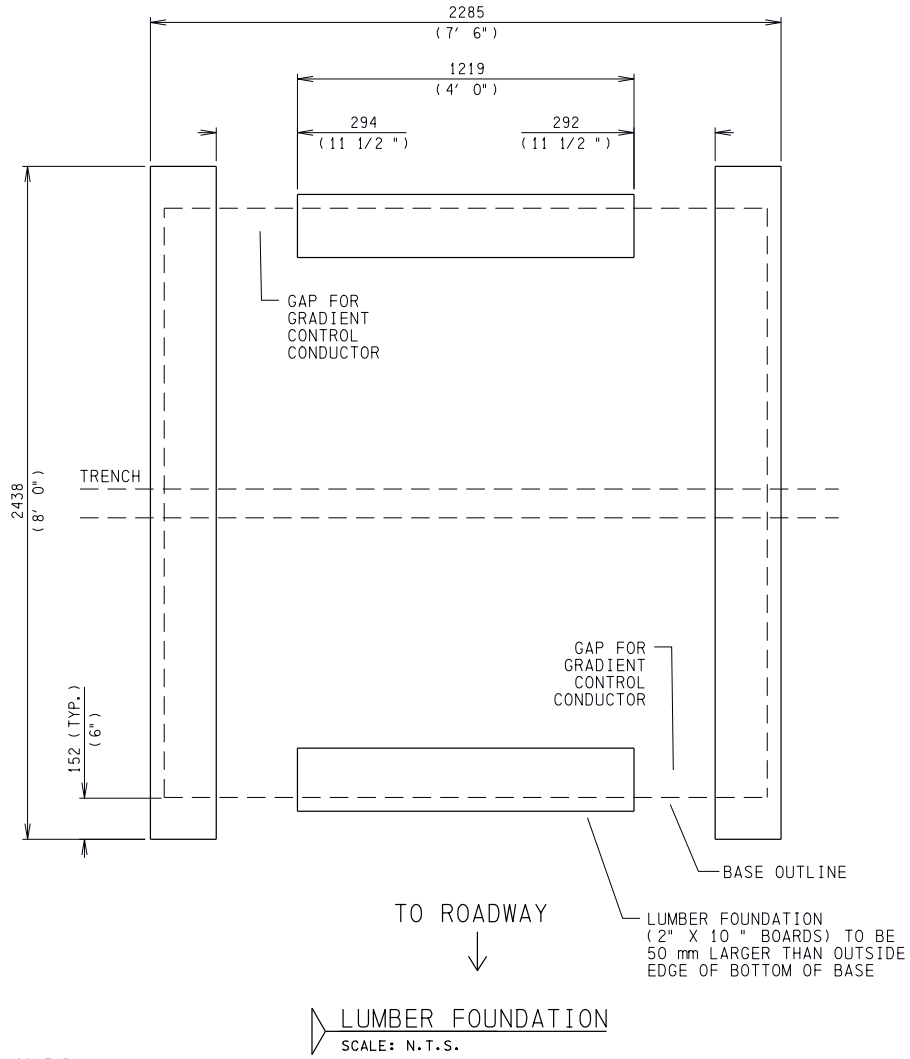

LUMBER FOUNDATION
SCALE: N.T.S.

NOTES CONT'D:

15. LUMBER FOUNDATION SHOULD BE 2" x 10" PRESSURE TREATED SPRUCE WITH 2 - 2438 mm AND 2 - 1219 mm LENGTHS (50 mm MAXIMUM LEDGE ON OUTSIDE).
16. RE-TREAT CUT ENDS OF LUMBER FOUNDATION BOARDS WITH COPPER NAPTHANATE WOOD PRESERVATIVE.

ALL DIMENSIONS IN MILLIMETERS (INCHES) UNLESS OTHERWISE SPECIFIED.

EPCOR
APEGA PERMIT P7061
UNDERGROUND DISTRIBUTION STANDARDS

REVIEWED BY STANDARDS COMMITTEE:	2017-12-14
DRAFTED BY:	R. LAWRIE
DESIGNED BY:	M. MIX
SCALE:	N.T.S.
DATE REVISED:	2022-02-17

I confirmed: M65739
PROFESSIONAL ENGINEER CARLO M. RECTO ALBERTA
2022-February-17

PERMIT TO PRACTICE
EPCOR DISTRIBUTION & TRANSMISSION INC
RM SIGNATURE: Catherine Wagner
RM APEGA ID #: 67305
DATE: 2022-02-17
PERMIT NUMBER: P007061
The Association of Professional Engineers and Geoscientists of Alberta (APEGA)

INSTALLATION OF PRECAST CONCRETE BASE FOR 4-WAY 3 PHASE 25 kV SWITCHING CUBICLE (ALL VARIANTS)

STANDARD NO. 65 00 07 25 23 132

PAGE NO. 3/ 6

DRAWING 6.8

Δ INSTALLATION OF PRECAST CONCRETE BASE FOR 4-WAY 3 PHASE 25kV SWITCHING CUBICLE (ALL VARIANTS) PAGE 4/6

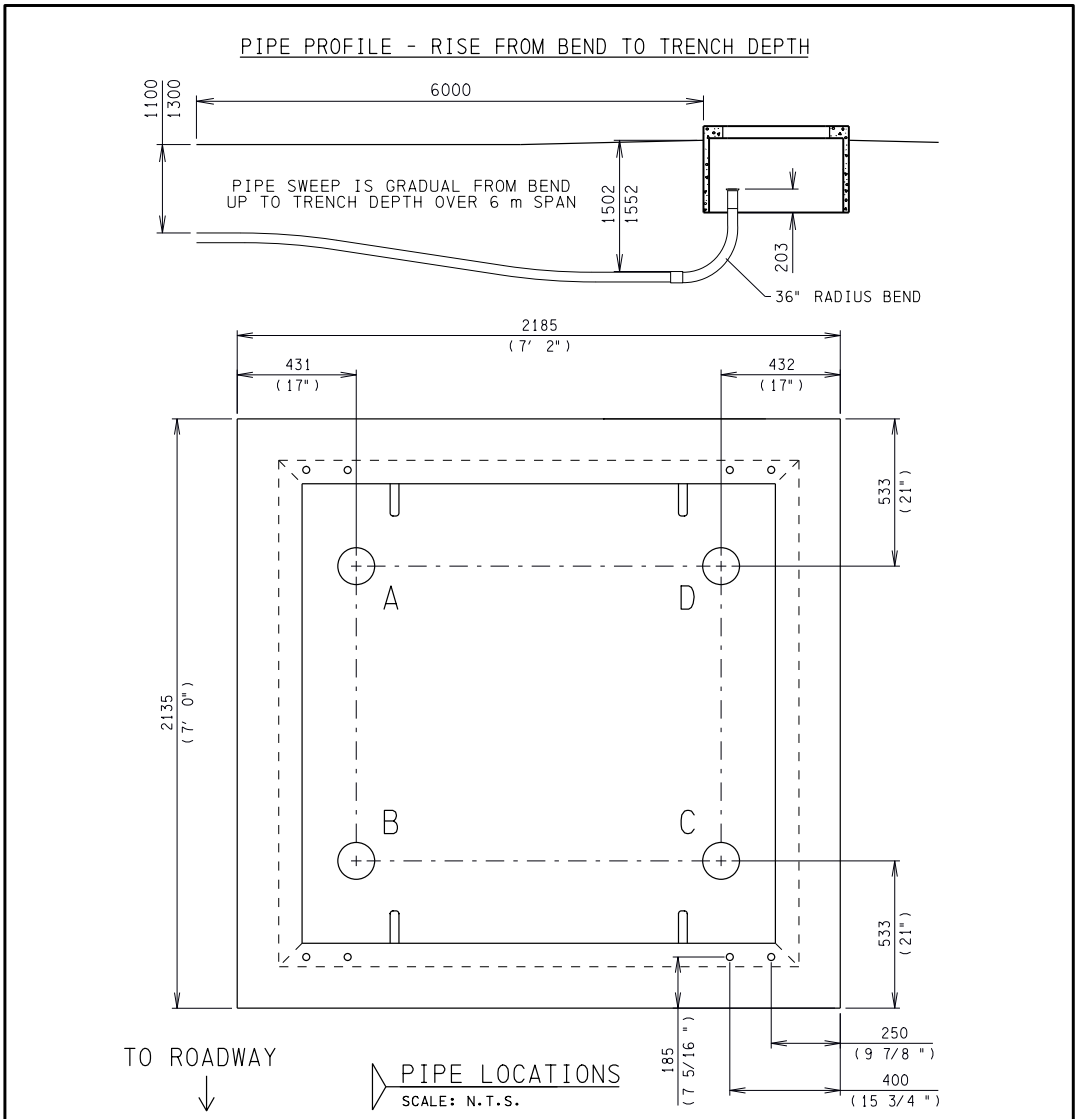

NOTES CONT'D:

17. ALL PIPES SHALL BE DB2 OR SCHEDULE 40 PVC. CONDUIT BENDS SHALL BE SCHEDULE 40 PVC. ALL DUCT BENDS SHALL BE 36" RADIUS, ANY OTHER TO BE APPROVED BY EDTI.
18. ALL MEASUREMENTS ARE TO THE OUTSIDE "TOP" OF THE BASE.

ALL DIMENSIONS IN MILLIMETERS (INCHES) UNLESS OTHERWISE SPECIFIED.

EPCOR
APEGA PERMIT P7061
UNDERGROUND DISTRIBUTION STANDARDS

REVIEWED BY STANDARDS COMMITTEE:	2017-12-14
DRAFTED BY:	R. LAWRIE
DESIGNED BY:	M. MIX
SCALE:	N.T.S.
DATE REVISED:	2022-02-17

I confirmed: M65739

PROFESSIONAL ENGINEER ALBERTA
CARLO M. RECTO

2022-February-17

PERMIT TO PRACTICE
EPCOR DISTRIBUTION & TRANSMISSION INC
PM SIGNATURE:
PM APEGA ID #: 67305
DATE: 2022-02-17
PERMIT NUMBER: P007061
The Association of Professional Engineers and Geoscientists of Alberta (APEGA)

INSTALLATION OF PRECAST CONCRETE BASE FOR 4-WAY 3 PHASE 25 kV SWITCHING CUBICLE (ALL VARIANTS)

STANDARD NO. 65 00 07 25 23 132

PAGE NO. 4/ 6

DRAWING 6.8

Δ INSTALLATION OF PRECAST CONCRETE BASE FOR 4-WAY 3 PHASE 25kV SWITCHING CUBICLE (ALL VARIANTS) PAGE 5/6

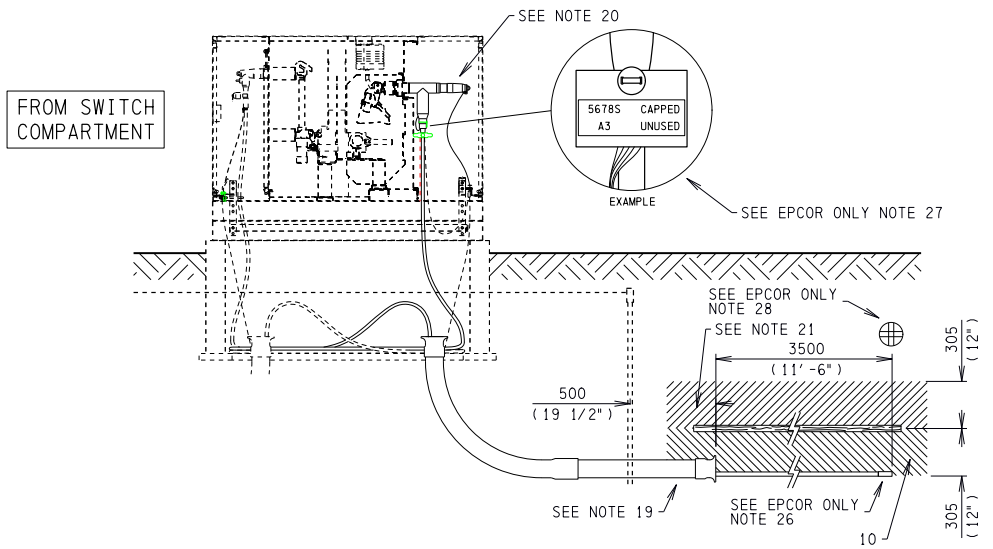

FUTURE PROVISION STUB-OUT
SCALE: N.T.S.

NOTES CONT'D:

19. FOR UNUSED COMPARTMENTS STUB OUT A CONDUIT 500 mm PAST THE GROUND GRID FOR FUTURE PROVISION. MARKER BALLS SHALL BE PLACED AT STUB OUTS FOR ALL SPARE CONDUITS.
20. FOR STUBBED CABLES ORIGINATING FROM SWITCH COMPARTMENTS THE ELBOWS ARE TO BE PLACED ON THE BUSHING WITH THE SWITCH IN THE OFF POSITION AND A LOCK & TAG ON THE SWITCH TO PREVENT OPERATION. THE CABLE NEUTRAL AND TERMINATION GROUND ARE TO BE CONNECTED TO THE GROUND BUS.
21. EXPOSED CABLE TAILS NOT PROTECTED INSIDE CONDUIT OR UNDER A TEMPORARY CONCRETE BASE MUST BE COVERED BY THE FOLLOWING IN ORDER: A 300 mm THICK LAYER OF SAND, 2"x8" (MINIMUM) PRESSURE TREATED PLANKING BUTTED TOGETHER WITHOUT VOIDS OR GAPS, AN ADDITIONAL 300 mm THICK LAYER OF SAND, AND FINALLY BACKFILLED TO GRADE AS PER SECTION A & B ON THIS DRAWING.
22. IF THE LOCATION OF THE PRECAST BASE IS WITHIN 4m OF A BUILDING FOUNDATION OR IF SOIL CONDITIONS DO NOT SUPPORT PRECAST BASES, ENGINEERED SCREW PILES MUST BE INSTALLED (REFER TO STANDARD 65 00 07 00 10 400). WHEN SCREW PILES ARE INSTALLED WOOD PLANKS ARE NOT REQUIRED, THE CONCRETE PAD IS TO SIT DIRECTLY ON PILE CAP/PLATE.

EPCOR NOTES ONLY, NOT FOR INSTALLATION ON PRIVATE PROPERTY:

23. FOR CABLE BYPASS TROUGH REQUIREMENTS AND INSTALLATION SEE DRAWING 66 00 07 00 46 005.
24. DUCT SIZES AS PER STANDARD 63 00 07 00 37 001.
25. THIS PRECAST BASE INSTALLATION STANDARD IS APPLICABLE FOR USE WITH THE FOLLOWING SWITCHING CUBICLE INSTALLATION STANDARDS: 65 00 07 25 23 030, 65 00 07 25 23 032, 65 00 07 25 23 037, 66 00 07 25 23 035.
26. ENSURE 3.5 m OF CABLE EXTENDS PAST THE END OF THE CONDUIT STUB OUT AND HEAT SHRINK THE CABLE TAIL AS PER 66 00 07 00 48 175.
27. USE CABLE IDENTIFICATION TAG TO INDICATE THE TERMINATED CABLE AS UNUSED AND CAPPED. SEE STANDARD 66 00 07 00 20 001 FOR IDENTIFCATION TAG DETAILS.
28. MARKER BALLS SHALL BE PLACED ABOVE THE CABLE TAIL ENDS. REFER TO STANDARD 63 00 07 00 17 001 OR A PRECAST BASE MAY BE USED AS PER STANDARD 66 00 07 00 48 100.

ALL DIMENSIONS IN MILLIMETERS (INCHES) UNLESS OTHERWISE SPECIFIED.

EPCOR APEGA PERMIT P7061 UNDERGROUND DISTRIBUTION STANDARDS	I confirmed: M65739 PROFESSIONAL ENGINEER CARLO M. RECTO ALBERTA PERMIT TO PRACTICE EPCOR DISTRIBUTION & TRANSMISSION INC RM SIGNATURE: Catherine Wagner RM APEGA ID #: 67305 DATE: 2022-02-17 PERMIT NUMBER: P007061 The Association of Professional Engineers and Geoscientists of Alberta (APEGA) 2022-February-17	INSTALLATION OF PRECAST CONCRETE BASE FOR 4-WAY 3 PHASE 25 kV SWITCHING CUBICLE (ALL VARIANTS)
REVIEWED BY STANDARDS COMMITTEE: 2017-12-14		STANDARD NO. 65 00 07 25 23 132
DRAFTED BY: R. LAWRIE		PAGE NO. 5/ 6
DESIGNED BY: M. MIX		
SCALE: N.T.S.		
DATE REVISED: 2022-02-17		

DRAWING 6.8

Δ INSTALLATION OF PRECAST CONCRETE BASE FOR 4-WAY 3 PHASE 25kV SWITCHING CUBICLE (ALL VARIANTS) PAGE 6/6

ITEM	PART DESCRIPTION	STOCK No.	QTY.
1	BASE PRECAST 600 AMP 25 kV 4-WAY 3 PHASE DEADFRONT SWITCHING CUBICLE	17253	1
2	ROD GROUNDING 5/8" x 5' (SEE NOTE 8)	17288	8
3	CONNECTOR GROUND ROD 3/4" - 250 DOUBLE WIRE	9136	2
4	WIRE #4/0 STRANDED COPPER BARE	45655	36m
5	LUMBER SPRUCE PRESSURE-TREATED - 2" x 10" x 8' PWF (RE-TREAT CUT ENDS)	13235	3
6	CONNECTOR GROUND 3/4" ROD - 250 1/C	31914	2
7	PIPE DUCT	AS REQ'D	A/R
	DB2 - 4"	53283	
	DB2 - 6"	42236	
	RIGID PVC - 4"	10083	
	RIGID PVC - 6"	10692	
8	ROAD CRUSH - 3/4"	N/A	A/R
9	BENDS RIGID PVC	AS REQ'D	4
	4" - 90 DEGREE 36" RADIUS PLAIN ENDS - IPEX P/N 069011	22960	
	6" - 90 DEGREE 36" RADIUS PLAIN ENDS	17787	
10	SAND	N/A	A/R
11	END BELL COLLAR	AS REQ'D	A/R
	RIGID PVC - 4"	20574	
	RIGID PVC - 6"	20889	
12	COUPLER - GROUND ROD	17289	4
13	COUPLING ADAPTER	AS REQ'D	A/R
	4" DB2 TO 4" PVC	38916	
	6" DB2 TO 6" PVC	10284	

EPCOR
APEGA PERMIT P7061
UNDERGROUND DISTRIBUTION STANDARDS

REVIEWED BY STANDARDS COMMITTEE: 2017-12-14
DRAFTED BY: R. LAWRIE
DESIGNED BY: M. MIX
SCALE: N.T.S.
DATE REVISED: 2022-02-17

I confirmed: M65739
PROFESSIONAL ENGINEER CARLO M. RECTO ALBERTA
2022-February-17

PERMIT TO PRACTICE
EPCOR DISTRIBUTION & TRANSMISSION INC
RM SIGNATURE: Catherine Wagner
RM APEGA ID #: 67305
DATE: 2022-02-17
PERMIT NUMBER: P007061
The Association of Professional Engineers and Geoscientists of Alberta (APEGA)

INSTALLATION OF PRECAST CONCRETE BASE FOR 4-WAY 3 PHASE 25 kV SWITCHING CUBICLE (ALL VARIANTS)

STANDARD NO. 65 00 07 25 23 132
PAGE NO. 6/ 6

DRAWING 6.9

Δ TYPICAL GUARDRAIL FOR BOLLARD & GUARD POST INSTALLATION PAGE 1/3

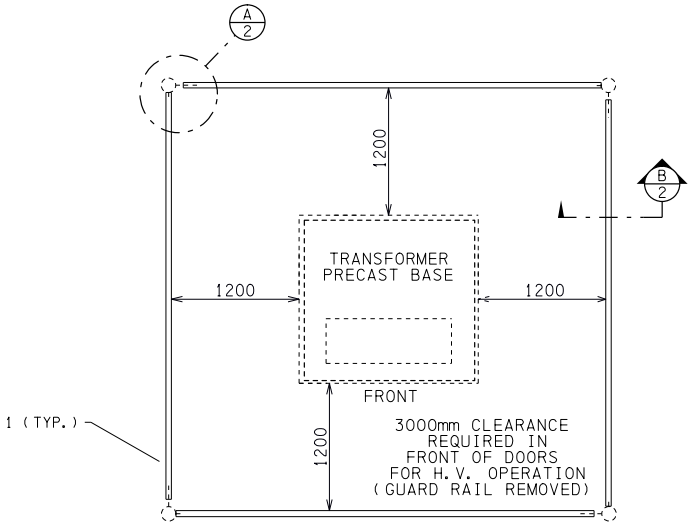

TOP VIEW - TYPICAL REMOVABLE GUARDRAIL CONSTRUCTION

SCALE: N.T.S.

NOTES:

1. STEEL REMOVABLE GUARDRAILS WITH CONCRETED STEEL BOLLARD POSTS ARE REQUIRED FOR ALL PADMOUNTED EQUIPMENT INSTALLATIONS ON PRIVATE PROPERTY. SEE STANDARD 65 00 07 00 12 500 AND 65 00 07 00 12 502 FOR TYPICAL BOLLARD AND GUARD RAIL CONSTRUCTION.
2. FOR ALL PADMOUNTED EQUIPMENT INSTALLATIONS ON PUBLIC PROPERTY, MECHANICAL PROTECTION SHALL BE CONSIDERED.
3. BOLLARD AND GUARD RAIL SHALL BE PAINTED SAFETY YELLOW WITH RUST INHIBITING PAINT.
4. ANY REDUCTION OF GUARD RAIL SPACING SHALL BE AT THE SOLE DISCRETION OF EDTI ENGINEERING BY WRITTEN APPROVAL ONLY.

ALL DIMENSIONS IN MILLIMETERS (INCHES) UNLESS OTHERWISE SPECIFIED.

EPCOR
APEGA PERMIT P7061
UNDERGROUND DISTRIBUTION STANDARDS

REVIEWED BY STANDARDS COMMITTEE:	YYYY-MM-DD
DRAFTED BY:	R. LAWRIE
DESIGNED BY:	L. LIUSZ / S. FRASER
SCALE:	N.T.S.
DATE REVISED:	2022-02-16

I confirmed: M65739

PROFESSIONAL ENGINEER CARLO M. RECTO ALBERTA

2022-February-17

PERMIT TO PRACTICE
EPCOR DISTRIBUTION & TRANSMISSION INC
PM SIGNATURE: Catherine Hoppe
PM APEGA ID #: 67305
DATE: 2022-02-17
PERMIT NUMBER: P007061
The Association of Professional Engineers and Geoscientists of Alberta (APEGA)

TYPICAL GUARDRAIL FOR BOLLARD & GUARD POST INSTALLATION

STANDARD NO. 65 00 07 00 12 502

PAGE NO. 1/3

DRAWING 6.9

Δ TYPICAL GUARDRAIL FOR BOLLARD & GUARD POST INSTALLATION PAGE 2/3

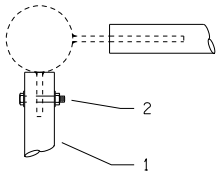

A GUARD RAIL DETAIL
SCALE: N.T.S.

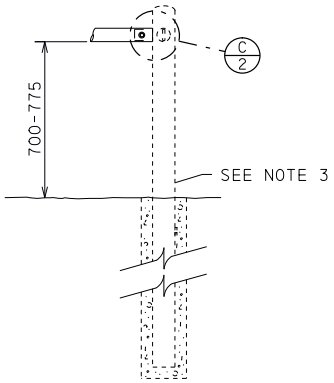

B SECTION
SCALE: N.T.S.

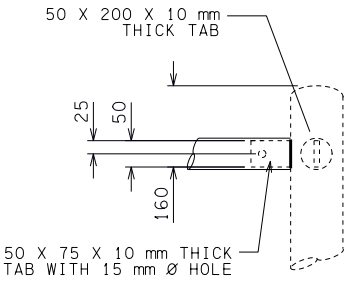

C GUARD RAIL DETAIL
SCALE: N.T.S.

ALL DIMENSIONS IN MILLIMETERS (INCHES) UNLESS OTHERWISE SPECIFIED.

EPCOR
APEGA PERMIT P7061
UNDERGROUND DISTRIBUTION STANDARDS

REVIEWED BY STANDARDS COMMITTEE:	YYYY-MM-DD
DRAFTED BY:	R. LAWRIE
DESIGNED BY:	L. LIUSZ / S. FRASER
SCALE:	N.T.S.
DATE REVISED:	2022-02-16

I confirmed: M65739

PROFESSIONAL ENGINEER CARLO M. RECTO ALBERTA

2022-February-17

PERMIT TO PRACTICE
EPCOR DISTRIBUTION & TRANSMISSION INC
PM SIGNATURE: Catherine Wagner
PM APEGA ID #: 67305
DATE: 2022-02-17
PERMIT NUMBER: P007061
The Association of Professional Engineers and Geoscientists of Alberta (APEGA)

TYPICAL GUARDRAIL FOR BOLLARD & GUARD POST INSTALLATION

STANDARD NO. 65 00 07 00 12 502

PAGE NO. 2/3

DRAWING 6.9

Δ TYPICAL GUARDRAIL FOR BOLLARD & GUARD POST INSTALLATION PAGE 3/3

ITEM	PART DESCRIPTION	STOCK No.	QTY.
1	PIPE STEEL 2" x 14 ft. - SCHEDULE 40	62849	1
2	1/2" x 4" HEX HEAD MACHINE BOLT W/ NUT	N/A	8

EPCOR
APEGA PERMIT P7061
UNDERGROUND DISTRIBUTION STANDARDS

REVIEWED BY STANDARDS COMMITTEE:	YYYY-MM-DD
DRAFTED BY:	R. LAWRIE
DESIGNED BY:	L. LIUSZ / S. FRASER
SCALE:	N.T.S.
DATE REVISED:	2022-02-16

I confirmed; M65739

PROFESSIONAL ENGINEER CARLO M. RECTO ALBERTA

2022-February-17

PERMIT TO PRACTICE
EPCOR DISTRIBUTION & TRANSMISSION INC
PM SIGNATURE:
PM APEGA ID #: 67305
DATE: 2022-02-17
PERMIT NUMBER: P007061
The Association of Professional Engineers and Geoscientists of Alberta (APEGA)

TYPICAL GUARDRAIL FOR BOLLARD & GUARD POST INSTALLATION

STANDARD NO. 65 00 07 00 12 502

PAGE NO. 3/3

DRAWING 6.10

GROUND GRID REQUIREMENTS FOR 15kV AND 25kV SWITCHING CUBICLES AND THREE PHASE TRANSFORMER NEXT TO EACH OTHER

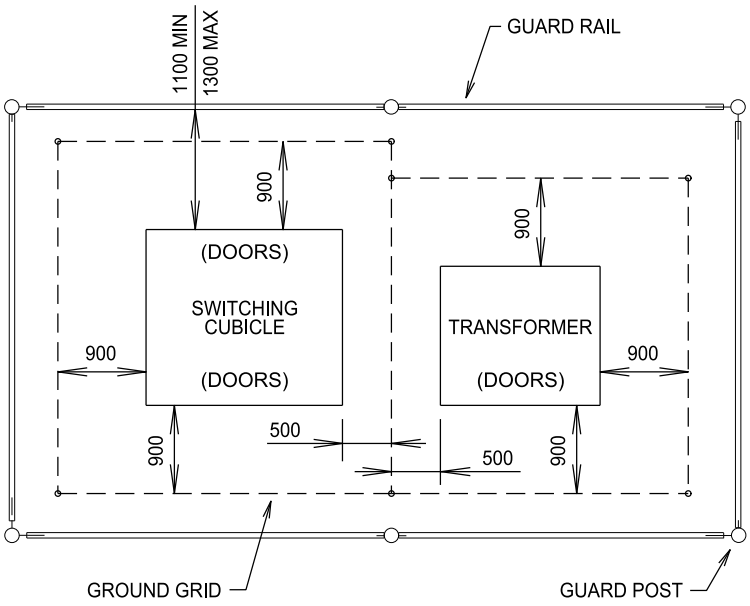

NOTE:
1. 3000 mm CLEARANCE REQUIRED IN FRONT OF ANY DOOR FOR HIGH VOLTAGE OPERATION.

EPCOR CUSTOMER CONNECTION GUIDE	GROUND GRID REQUIREMENTS FOR 15 kV & 25 kV SWITCHING CUBICLES AND THREE PHASE TRANSFORMERS NEXT TO EACH OTHER		
DATE REVISED: 2017-01-23	DRAWING NO.: 010	REFERENCE NO. 66 CC 07 00 60 002	PAGE NO. 1/1

7.0

Primary Metered Service

7.1 Δ GENERAL INFORMATION

a. Primary service connections may require in excess of one year lead time prior to the start of construction. Factors in this long lead time are where off-site construction is required, and where ordering primary service equipment from the manufacturer is required. This lead time begins when the servicing details are finalized, and the Customer Acceptance portion of the estimate letter is returned and payment is made.

   i. EDTI strongly recommends Customers engage an electrical consultant/Engineer early in the design process to determine the primary servicing requirements for their project, and to submit their application for primary service at least 18 months prior to the date service is requested.

b. Primary metered services are available in the 15kV or 25kV areas only.

c. Typical installations include very large commercial applications where the demand load will exceed 2,500kVA to one building, an industrial lot with a single Customer, or a commercial lot with a single Customer.

d. Please see Table 3.1 – Project Overview for a summary of your responsibilities as the Customer and the responsibilities of EPCOR Distribution and Transmission Inc. (EDTI).

e. If you decide you require a primary metered service, please complete the Commercial Application Form.

f. See Section 12 – Additional Information to learn about such topics as temporary power, splicing, operations, equipment relocation, and pre-inspection checklists.

7.2 SERVICE TYPE GENERAL REQUIREMENTS

a. The allowable service size is governed by many factors. Please contact us for details regarding your specific project/site.

b. 15kV primary metered services are not permitted within EPCOR's 25kV area, and 25kV primary services are not permitted within EPCOR's 15kV area. If you're in a 5kV area, please contact us for information on conversion to 15kV. Refer to Drawings 3.1, 3.2, and 3.3 for the primary voltage in your area, and contact us for confirmation.

7.3 SWITCHGEAR SUBMISSION DRAWINGS

a. Submitted drawings must include:

   i. A site plan containing the duct routing for the main feeder, including location and angle of bends, corner-to-corner distance between bends, any changes in elevation and detailed manhole drawings (including drainage).

   ii. Complete single-line diagrams showing interlock, all instrument and power transformers, fuses, relays, megavolt-amps (MVA) rating of Customer switchgear, standby generation, transformer sizes, and types of winding, as well as other appropriate information. The control and protection schematic should show the breaker direct current (DC) control wiring, the transfer scheme between the main feeder, the standby feeders, and the pilot wire contacts, where required.

   iii. Plans showing the switchgear layout in the electrical room, duct and cable routing, and details of EDTI Customer Engineering Services' cable termination cell.

iv. Shop drawings of the proposed switchgear.

v. Switchgear must be approved for service entrance.

vi. Switchgear and electrical room layout details, including provisions for pilot wire relaying, where required.

vii. Three sets of main breaker specifications and operating conditions.

viii. Confirmation of the DC power supply for EDTI's pilot wire relay, if applicable.

7.4 Δ SERVICE DUCTS

a. All permanent commercial services must be in duct.

b. High Density Polyethylene (HDPE) ducts shall not be permitted, even when certified for the intended use.

c. The Customer must supply and install a spare conduit between the service entrance point and switchgear to accommodate the replacement of the conductor in the event of a cable fault.

d. Duct must be installed where primary cable is deemed inaccessible by EDTI.

e. All ducts must be equipped with bell collars at their ends to avoid damaging the cable.

f. The installation of primary service cable under buildings/structures is not permitted, even when in duct.

g. The Customer will provide all conduits, pull boxes, and manholes required for installing the electrical services on the Customer's property. EDTI approved product shall be used, including rigid PVC, DB2, Carlon Borguard, or Terracon.

h. The Customer cannot install ducts into an energized manhole or handhole.

i. Conduit size requirements for primary cables depend on cable size and voltage. See Drawing 3.1 for primary voltage and Table 6.1 for primary cable, duct, and pull box standards.

j. Service conduits installed by contractors working on behalf of other utilities or the City of Edmonton must follow EDTI's construction standards. Contractors must not work within 1.0m of any electrical equipment.

k. When EDTI conduits have been stubbed to the property line, Customers must first confirm that the conduit exposed is the correct one, and then connect their supply conduit to EDTI's conduit. Contact us to arrange for conduit verification.

l. Where gas easements/utility rights-of-way exist, the service ducts are to be extended past the gas easement/utility right-of-way and capped.

m. If the pulling tension of the cable exceeds its allowable limit, a pull box must be installed. See Section 7.6 – Ground-Mounted Pull Boxes for more information.

n. The Customer shall be responsible for installing and maintaining conduit sealing, and a suitable means of drainage, for ducts entering a building, per the Canadian Electrical Code.

7.5 DUCT BENDS

a. All bends exiting transformers and cubicles must be made of rigid, thick-walled PVC (Schedule 40) with minimum wall thickness of 6.0mm for a 100mm (4 in.) diameter duct, 6.6mm for a 125mm (5 in.) diameter duct, and 7.1mm for a 150mm (6 in.) diameter duct. DB2 bends are not acceptable.

b. An additional 3,000mm (10 ft.) horizontal section of rigid, thick-walled PVC must be attached to the bend.

c. All bends must be equipped with bell collars to avoid damaging the cable.

d. All spare bends are to be covered (taped or covered by some other suitable method) to prevent material falling into them.

e. Primary ducts exiting switching cubicles must be identified (i.e. identify the piece of equipment the pipe services).

f. Precast concrete pad must be removed before inserting additional ducts into existing pads.

g. See Drawings 3.1, 3.2 and 3.3 for primary voltage and Table 6.1 for primary cable, duct, and pull box standards.

7.6 Δ GROUND-MOUNTED PULL BOXES

a. EDTI reserves the right of final approval of the pull box size and location.

b. Communication cables cannot share the same pull box with primary or secondary cables.

c. Customer-owned facilities cannot share the same pull box with EDTI facilities.

d. If the pulling tension of the cable exceeds its allowable limit, a pull box must be installed. See Drawing 6.1 for details.

e. The cumulative total of all bends between pulling points shall not exceed 360 degrees of bends.

f. The size of ground-mounted pull box you require depends on the type of cable being installed. See Table 6.1 for details.

g. Conduits must enter and leave the pull box at the same level.

h. All bends entering/exiting pullboxes, manholes, or vaults must be made of rigid, thick-walled PVC (Schedule 40) with minimum wall thickness of 6.0mm for a 100mm (4 in.) diameter duct, 6.6mm for a 125mm (5 in.) diameter duct, and 7.1mm for a 150mm (6 in.) diameter duct. DB2 bends are not acceptable.

7.7 PULL BOXES IN BUILDINGS

a. EDTI reserves the right of final approval of the pull box size and location.

   i. Pull boxes in buildings must be sized according to EDTI requirements, and shall only be permitted in the electrical room.

   ii. When installed, pull boxes shall be lockable and be clearly marked “EPCOR Access Only”.

   iii. Contact us to discuss your specific installation.

b. Communication cables cannot share the same pull box with primary or secondary cables.

c. Customer-owned facilities cannot share the same pull box with EDTI facilities.

d. If pulling lengths exceed the maximum pulling tension of the cable, a pull box must be installed.

e. The cumulative total of all bends between pulling points shall not exceed 360 degrees of bends.

f. See Table 6.1 for information on primary cable dressing and pulling radius.

7.8 Δ SWITCHING CUBICLES

a. EDTI reserves the right of final approval for the location of facilities.

b. EDTI requires truck access to on-property transformers, switching cubicles, poles, and pull boxes where EDTI will be installing the cable. See Section 3.16 – Equipment Access for more information.

c. EDTI will supply, install, and maintain required switching cubicles, and perform all required primary conductor terminations at the switching cubicle and Customer's switchgear.

d. When a switching cubicle is required on the Customer's property, the Customer must provide the precast concrete bases with an appropriate ground grid and guardrails. Please see Section 6.5 – Ground Grids and Guardrails for Padmounted Equipment.

e. When a switching cubicle is required for servicing it must be placed on the Customer's site within a registered utility Right-of-Way (easement). See Section 3.8 – Easements and Utility Rights-of-Way for details.

f. Switching cubicles must be connected to EDTI's main line in such a manner as to provide a loop feed. No radial-fed cubicle installations will be allowed on private property.

g. When the Customer is required to install a switching cubicle base, it shall be constructed in accordance with:

- Drawing 6.5 – Installation of Precast Concrete Base for 4-Way Single Phase 15kV 200A Dead Front Switching Cubicle
- Drawing 6.6 – Installation of Precast Concrete Base for 4-Way Single Phase 25kV 200A Dead Front Switching Cubicle
- Drawing 6.7 – Installation of Precast Concrete Base for 4-Way 3 Phase 15kV Switching Cubicle (All Variants)
- Drawing 6.8 – Installation of Precast Concrete Base for 4-Way 3 Phase 25kV Switching Cubicle (All Variants)

h. The fault indicator lights adjacent to the "B" compartment of switching cubicles must face the main road.

i. Excavation for transformer and switching cubical bases shall be stepped so that the native backfill is not disturbed under the ground grid area. This will help prevent rods bending and deformation of the ground grid during backfilling and compaction. The area where the ground grid and rods are installed shall not be excavated deeper than required to install the ground grid.

j. The bottom of the excavation where the base will be installed requires 300mm of compacted 20mm crushed gravel.

k. Proper sub-base compaction is crucial to ensure transformer and switching cubicle bases are installed correctly. Ensure that 20mm crushed gravel is compacted in lifts of 150mm or less, at optimal moisture. See Drawings 6.3, 6.4, 6.5, 6.6, 6.7, and 6.8.

l. Pressure-treated lumber is required under all switching cubicle bases and Single phase transformer bases, per Drawings 6.3, 6.5, 6.6, 6.7, and 6.8.

m. If the location of the precast base is within 4.0m of a building foundation or if soil conditions do not support precast bases, engineered screw piles or concrete piles must be installed.

    i. When piles are used, wood planks shall not be used. The concrete pad shall sit directly on pile cap/plate. If shims are required, steel shims affixed with welds or appropriate construction adhesive may be used. Drawings authenticated by a Professional Engineer registered in the Province of Alberta with APEGA shall be supplied to EDTI before EDTI will grant approval.

    ii. When piles are used, the duct bends shall not be less than 36 in. radius bends.

n. Customer shall submit compaction test reports for all pad installations on site. If adequate compaction cannot be achieved, piles are required. See Section 3.12 – Trenching and Backfilling for compaction and backfill requirements.

o. The use of 24 in. bends may be permitted where the edge of the base is within 9.14m (30 ft.) of the property line. This option shall not be used in conjunction with screw piles. Special care to achieve proper compaction is necessary to avoid pull out.

p. No obstructions that could interfere with high-voltage switching—such as large rocks, decorative boulders, trees, and fences—shall be allowed within 3.0m on the door sides of transformers and switching cubicles.

q. Within 3.0m of padmounted equipment, landscaping must slope away from the base for proper drainage and safe operational switching per Drawings 6.3, 6.4, 6.5, 6.6, 6.7, and 6.8.

r. Equipment must not be subject to flooding under runoff conditions.

s. Rough grade must be established at 100mm to 150mm below final grade and marked on the base prior to inspection.

t. The height of the top of the concrete base must be between 250mm and 300mm above final grade.

u. Curbs within 3.0m of the door sides of transformers and switching cubicles require approval from EDTI prior to construction.

v. When a switching cubicle base is installed, the Customer must install a pull string in each duct between the cubicle and Customer's switchgear.

w. When padmounted equipment is to be located on top of a structure, other than a precast base, authenticated drawings prepared by a Professional Engineer registered in the Province of Alberta with APEGA must be submitted to EDTI.

7.9 Δ GROUND GRIDS AND GUARDRAILS FOR PADMOUNTED EQUIPMENT

a. Transformers and switching cubicles must be protected from mechanical damage. Customers are required to provide guardrails for all installations of transformers and switching cubicles on private property.

b. Guardrails must have removable sections in front of the doors of equipment, as per Drawings 6.3 and 6.4 for transformers, and Drawing 6.9 – Typical Guardrail for Bollard & Guard Post Installation for switching cubicles. Please note that switching cubicles have two sets of doors, requiring removable sections in front of each.

c. A single welded stud on the guardrail post in lieu of a double bolt connect shall be permitted, so long as the same size bolt is used, and the weld interface is not a spot or stitch weld (e.g.: full weld all around).

d. Customers are responsible for installing ground grids around all padmounted equipment. They must consist of four copper-clad ground rods interconnected by 4/0 bare copper grounding conductor and an additional two 4/0 bare copper grounding conductor tails, connected to the ground bus of the equipment.

e. A sufficient length of #4/0 bare copper grounding conductor must be installed to allow 5.0m (no more or less) to be left above the top of the precast transformer base. The conductor must be left in an organized manner to allow for easy removal and shaping.

f. Ground rod resistance must measure 6 ohms or less.

g. All stubbed ducts shall extend a minimum of 1.0m past the ground grid's outer edge.

h. The minimum distance to the property line for the ground grids of padmount transformers and switching cubicles is 1.0m.

i. When non-EDTI equipment or buildings/structures are placed within 3.0m of the edge of EDTI equipment, the ground grid of the EDTI equipment must be bonded using two tails to the ground of the non-EDTI equipment or buildings/structure. The Customer must show details on the power plan of how the bonding is to be achieved. The detail must also show the clearance between the edge of the EDTI equipment and non-EDTI equipment/ buildings/structure. The non-EDTI equipment or buildings/structure cannot be installed within 1.0m of the EDTI ground grid; and may not be located within the guardrails.

j. Ground grids for padmount equipment located on the top of a parkade must be bonded to the rebar of the building with two #4/0 conductors terminating to a remote ground grid. These conductors must be physically separated. The equipment base must be encircled by a #4/0 bare copper conductor embedded in the concrete 900mm outside of the base. The gradient control conductor must be bonded to the rebar in the four corners, with two tails from alternate corners entering the base and a length of 5.0m extending above the top of the base. Authenticated drawings prepared by a Professional Engineer registered in the Province of Alberta with APEGA must be submitted to EDTI.

k. See Drawing 6.10 – Ground Grid Requirements for 15kV and 25kV Switching Cubicles and Three Phase Transformers Next to Each Other for ground grid requirements when cubicles and transformers are next to each other.

l. Fine-grain clay backfill is required around the ground grid.

m. Special care must be taken to ensure that the subgrade around and under the base is compacted without damaging the ground rods, ground grid or the ground conductors (tails).

7.10 CONDUCTORS

a. See Drawing 3.1 for primary voltage and Table 6.1 for primary cable, duct, and pull box standards.

7.11 CABLE INSTALLATION

a. If the pulling tension of the cable exceeds its allowable limit, a pull box must be installed. See Section 6.9 – Ground-Mounted Pull Boxes for more information.

b. Telephone and television cables can be installed in the same trench as power conductors. Design drawings must be forwarded to the appropriate organizations for their approval.

c. Cable cannot be installed on building footings or weeping tile.

d. Primary cable ends must be wrapped with elastomeric tape (e.g. Greenline) to prevent the migration of moisture in the cable before testing. Elastomeric tape must be wrapped in a spiral shape overlapping half of each previous wrap at a time and then covered with black low-voltage vinyl tape. A minimum of two layers of half-lapped tape is to be applied. Immediately after testing, heat shrink caps must be installed on primary cable ends.

e. EDTI will terminate primary conductors to line side of the Customer's main breaker and the cubicle.

f. EDTI will supply and install all primary conductors in the Customer-prepared conduit after the primary ductwork has passed an electrical inspection. Multi-family sites are an exception to this rule.

g. The maximum length of service conductors permitted in a building is 3.0m, unless they are mechanically protected in rigid metal conduit, in which case the maximum is 7.5m.

7.12 COORDINATION STUDY

a. A coordination study, prepared by a Professional Engineer registered in the Province of Alberta with APEGA, shall be submitted to EDTI for approval. The study must include the following information:

   i. Two sets of drawings, one for phase current and the other for residual current, plotted on "log-log" graph paper.

   ii. EDTI's relay time/current characteristics that are provided by the utility to the Customer

   iii. Relay time/current characteristics at the Customer's incoming feeder and at least one level downstream from the incoming feeder.

   iv. Types of relays with proposed settings, size, and type of fuses (ANSI type).

   v. Size and characteristics of any other protective devices.

   vi. Single-line sketch indicating the protective elements covered by the study.

7.13 Δ SWITCHGEAR

a. Switchgear must be approved for service entrance.

b. All enclosures housing live parts on the line side of the main breaker must bear a warning sign stating “Access Limited to EPCOR Distribution Only” per the Canadian Electrical Code.

c. Precautionary measures are to be taken to prevent water entering the top-connected switchgear.

d. The interrupting capacity of main switches and breakers must be sized according to Table 3.3 – Main Switch or Breaker Minimum Interrupting Capacity.

e. If the Customer’s connected load will be above 3MVA, breakers must be provided instead of loadbreak switches.

f. The Customer must provide and maintain overcurrent protection in accordance with Section 14 and Rule 36-204 of the Canadian Electrical Code – Part I.

g. Protection devices must be verified and acceptable to EDTI to ensure compatibility with our distribution system’s overcurrent protection.

h. The Customer must provide 20mm grounding ball on main bus and ground bus in a clearly identified location. Fitted insulation caps for the grounding balls shall be provided and installed in the incoming cell.

i. The Customer must provide space for and install EDTI-supplied revenue metering current and potential transformers in the Customer’s switchgear on the load side of the main breaker.

j. The minimum clear distance between different polarities/phases, and live and case/grounded parts for the terminations, shall be required as per Table 7.1 – Cable Terminations in Customer-Owned Switchgear.

k. Space must also be provided within the Customer’s switchgear for terminating the primary feeders. Contact us prior to designing, specifying, or ordering switchgear for specific requirements.

l. A permanent, legible, single-line diagram of the switchgear and operating instructions will be provided by the Customer. It must be under a frame of glass in a noticeably visible location within sight of the switchgear. The markings on the switchgear must cross-reference the diagram.

m. The Customer shall install EDTI provided, EDTI Control Designation Lamacoids, as requested.

n. The Customer is responsible for providing regular maintenance on all facilities on their side of the point of service and keeping a record of maintenance. Proof of maintenance must be provided upon our request.

o. Automated or manual transfer to the standby feeder will be permitted on a “break before make” scenario. Switching between feeders requires prior permission from EDTI’s Control Centre.

p. EDTI has the right to examine and confirm all proposed settings of the Customer’s protection equipment to ensure compatibility with our protection devices.

q. EDTI reserves the right to determine whether pilot wire relaying is required on the service. The Customer must provide for pilot wire relaying and associated instrumentation transformers, if deemed necessary by EDTI.

r. EDTI has the right to witness all commissioning of the new service as EDTI deems necessary in its sole option.

7.14 BREAKER SPECIFICATIONS (MAIN SERVICE)

a. Breakers must have a maximum total clearing time of five cycles.

b. Protection and alternating current (AC) tripping-current transformers must have adequate ratings to operate the relays, and be designed to function properly under maximum fault conditions.

c. A direct current (DC) supply, from storage batteries, must be provided for tripping the 13.8kV and 25kV circuit breakers on the main incoming feeders from EDTI's distribution system. Battery control power must comply with Rule 14-308 of the Canadian Electrical Code – Part I.

7.15 PROTECTION AND CONTROL REQUIREMENTS (OVERCURRENT PROTECTION)

a. The Customer will provide overcurrent protection on electrical systems on the Customer's side of the point of service, in accordance with the Canadian Electrical Code – Part I.

b. A protection Coordinating Time Interval (CTI) of 0.3 seconds for relays and 0.2 seconds for fuses is required.

c. Phase and residual overcurrent relays with instantaneous and inverse time characteristics are required on the main breaker.

d. To coordinate with EDTI's system relays, the relay curves cannot exceed:

   i. On the 25kV system, the equivalent of an EEI-NEMA #100 K fuse

   vii. On the 15kV system, the equivalent of an EEI-NEMA #140 K fuse

e. If the requirements noted above cannot be achieved, contact us to discuss possible alternatives.

7.16 PROTECTION WITH PILOT WIRE RELAYING

In general, this is a requirement for dedicated feeders. When we require pilot wire relaying, the Customer will do the following:

a. Supply and install a 53mm (2 in.) conduit from the service entry to the main breaker.

b. Supply and install three 600/5-A, 15kV or 25kV current transformers (relaying accuracy class 2.5L400) per feeder. These are installed on the load side of the main breaker and the revenue metering transformers, but before the isolating switch.

c. Provide test blocks for pilot wire relay current transformers and trip output blocking as specified:

   i. For the pilot wire relay, ABB FT-1 style No. 188A 229 G01

   ii. For the trip output blocking, ABB FT-1 style No. 129A 539 G01 with red handles

d. Include provisions for our relays to trip and electrically block closing of their main breakers.

e. Supply a nominal 129V, direct current, 1A (129V, DC, 1A), continuous output, ungrounded power supply. Battery control power must comply with Rule 14-308 of the Canadian Electrical Code – Part I.

f. Ensure a 650mm wide by 650mm high by 300mm deep space remains in front of the instrument compartment of the main breaker cell. This is for EDTI to cut a hole and mount the relays.

g. Provide space near the entry point of the 53mm (2 in.) pilot wire conduit into the electrical room. The space is required for installing cabinets and boxes containing pilot wire relaying equipment.

7.17 AERIAL SERVICES

a. EDTI Customer Engineering Services will only allow aerial industrial service connections in special circumstances. To verify whether your service connection applies, contact us.

b. Installation must comply with Part 1 of the Canadian Electrical Code and the Alberta Electrical Utility Code.

c. See Section 4 – Aerial Secondary Service for more information related to overhead services.

7.18 COMMISSIONING

a. Prior to commissioning of the electrical service, the Customer must submit the following to EDTI, in writing and under the seal of a registered Professional Engineer:

   i. As-built drawings.

   ii. Confirmation of the operational readiness of the main service equipment.

   iii. Test reports on the Customer's protection equipment, verification of transfer characteristics of the main breakers, and confirmation that a key-interlock system is safe and functional.

   iv. Field calibration tests on the overcurrent relays with verification of the response time for 1.5, 6, and 20 times the tap setting.

   v. Field saturation checks on the current transformers and measurement of the direct current (DC) resistance burden on each current transformer.

   vi. Confirmation of the DC power supply for EDTI's pilot wire relay.

   vii. Confirmation that trip checks will be performed from protection schemes to circuit breakers prior to energization.

   viii. Confirmation that load and vector checks will be performed at the relay terminals upon energization of the electrical service.

b. EDTI Customer Engineering Services reserves the right to witness all checking and testing, and meet with the Customer's operator to confirm the rules for operating the main incoming feeder.

IMAGE 7.1

Δ EXAMPLES OF FULLY INSULATED SWITCHGEAR TERMINATIONS

DRAWING 7.1

Δ CABLE TERMINATIONS IN CUSTOMER-OWNED SWITCHGEAR PAGE 1/6

GENERAL NOTES:

1. APPLICABLE FOR XLPE/EPR INSULATED CABLES ONLY. SEE STANDARD 63 00 07 00 48 002 FOR CABLE SELECTION.
2. THIS STANDARD SHALL ONLY BE USED FOR VERTICALLY ORIENTED TERMINATIONS WHERE THE CABLES ARE ENTERING/EXITING FROM THE BOTTOM OF THE SWITCHGEAR WITH TERMINATORS CONNECTED ON TOP.
3. THIS STANDARD EXCLUDES HORIZONTAL OR SIDE-FED CABLE ORIENTATION.
4. DESIGNER/ENGINEER ARE RESPONSIBLE FOR ENSURING THE STRUCTURAL CAPACITY OF INSTALLATION AND ADDING CABLE SUPPORT MEANS AS REQUIRED.
5. REFER TO THE TERMINATOR SPACING REQUIREMENTS TABLE FOR MINIMUM CLEARANCES REQUIRED ON TYPICALLY STOCKED TERMINATOR KITS.
6. REFER TO THE BUS COVER REQUIREMENTS TABLE FOR SPECIFIC REQUIREMENTS ON ACCEPTABLE BUS INSULATION SCHEMES.

SITE SPECIFIC NOTES:

1. SUBSTATION TERMINATION

   A. CONNECT EACH CABLE CONCENTRIC NEUTRAL TO THE SUBSTATION SWITCHGEAR GROUND BUS. (AS SHOWN ON FIGURE 1)
   B. LUGS SHALL BE FILLED WITH FILLER PUTTY AND WRAPPED IN SILICONE TAPE IN HALF LAPPED LAYERS. (AS SHOWN ON FIGURE 1)

2. NEW PRIMARY SWITCHGEAR INSTALLATION

   A. SWITCHGEAR REQUIREMENTS

      i. SWITCHGEAR SHALL ADHERE TO CANADIAN ELECTRICAL CODE PART 1 SECTION 36.
      ii. BUS BARS
         1. BUS BARS SHALL BE INSULATED
         2. BUS BARS SHALL BE FURNISHED WITH 20 mm (FOR NETWORK, S/N 1540) OR 25 mm (GENERAL USE) GROUNDING BALLS AS REQUIRED.
      iii. SWITCHGEARS SHALL HAVE A MINIMUM 1m WIDTH AND 1m CLEARANCE TO THE DOOR FROM THE BUS.
      iv. CONSULT WITH CUSTOMER ENGINEERING DEPARTMENT/CUSTOMER ENGINEERING DOCUMENT FOR THE LATEST ADDITIONAL SPECIFIC REQUIREMENTS.

   B. INSPECTIONS

      i. THIRD PARTY INSPECTION IS REQUIRED FOR CABLE TERMINATIONS.
      ii. INSTALLATIONS SHALL BE SUBJECT TO BOTH ELECTRICAL INSPECTIONS AT CUSTOMER PREMISES (CANADIAN ELECTRICAL CODE PART 1 CONDUCTED BY ELECTRICAL SAFETY CODES OFFICER "A" - CITY OF EDMONTON INSPECTOR) AND UTILITY INSTALLATION (CSA 22.3 NO. 7 CONDUCTED BY ELECTRICAL SAFETY CODES OFFICER "B" - EPCOR ELECTRICITY DISTRIBUTION INSPECTOR)

3. MODIFICATIONS TO EXISTING PRIMARY SWITCHGEAR

   A. INSTALLATIONS SHALL BE SUBJECT TO BOTH ELECTRICAL INSPECTIONS AT CUSTOMER PREMISES (CANADIAN ELECTRICAL CODE PART 1 CONDUCTED BY ELECTRICAL SAFETY CODES OFFICER "A" - CITY OF EDMONTON INSPECTOR) AND UTILITY INSTALLATION (CSA 22.3 NO. 7 CONDUCTED BY ELECTRICAL SAFETY CODES OFFICER "B" - EPCOR ELECTRICITY DISTRIBUTION INSPECTOR)

   B. CONSULT WITH EPCOR LEGAL DEPARTMENT AND COMMUNICATIONS DEPARTMENT ON SPECIFIC REQUIREMENTS TO MITIGATE RISK ON MODIFICATION OF CUSTOMER OWNED SWITCHGEAR. CONSIDERATIONS INCLUDE (BUT ARE NOT LIMITED TO) THE FOLLOWING:
      - PERMITTING, ALLOWING ACCESS AND MODIFYING EQUIPMENT OWNED BY OTHERS.
      - "GRANDFATHERING" VERSUS UPGRADING TO CURRENT STANDARDS
      - INSPECTIONS REQUIREMENTS
      - VALIDITY OF INSURANCE AFTER MODIFICATIONS

   C. FACTORY MANUFACTURED SWITCHGEARS
      CAUTION: AIR INSULATED PHASE-TO-PHASE AND PHASE-TO-GROUND CLEARANCES OF EXISTING CUSTOMER OWNED PRIMARY SWITCHGEAR MANUFACTURED TO CSA 22.2 NO. 31 - SWITCHGEAR ASSEMBLIES MAY HAVE ACTUAL LIVE PARTS SEPARATED LESS THAN THE MINIMUM RECOMMENDED SPACINGS REQUIRED FOR STOCKED TERMINATORS. THIS MAY VARY FROM SWITCHGEAR-TO-SWITCHGEAR. ACTUAL MEASUREMENTS SHALL BE TAKEN AND COMPARED TO THE TERMINATOR SPACING REQUIREMENTS TABLE.

EPCOR APEGA PERMIT P7061 UNDERGROUND DISTRIBUTION STANDARDS	I am the author: M65739 PROFESSIONAL ENGINEER CARLO M. RECTO ALBERTA PERMIT TO PRACTICE EPCOR DISTRIBUTION & TRANSMISSION INC. RM SIGNATURE: Catherine Wagner RM APEGA ID #: 67305 DATE: 2022-01-17 PERMIT NUMBER: P007061 The Association of Professional Engineers and Geoscientists of Alberta (APEGA)	CABLE TERMINATIONS IN CUSTOMER-OWNED SWITCHGEAR
REVIEWED BY STANDARDS COMMITTEE: YEAR-MM-DD		
DRAFTED BY: R. LAWRIE		
DESIGNED BY: C. M. RECTO		
SCALE: N.T.S.		
DATE REVISED: 2022-01-10		STANDARD NO. 63 00 07 15 48 238 / PAGE NO. 1/ 6

2022-01-10

DRAWING 7.1

Δ CABLE TERMINATIONS IN CUSTOMER-OWNED SWITCHGEAR PAGE 2/6

FIGURE 1 - TYPICAL SUBSTATION SWITCHGEAR CELL

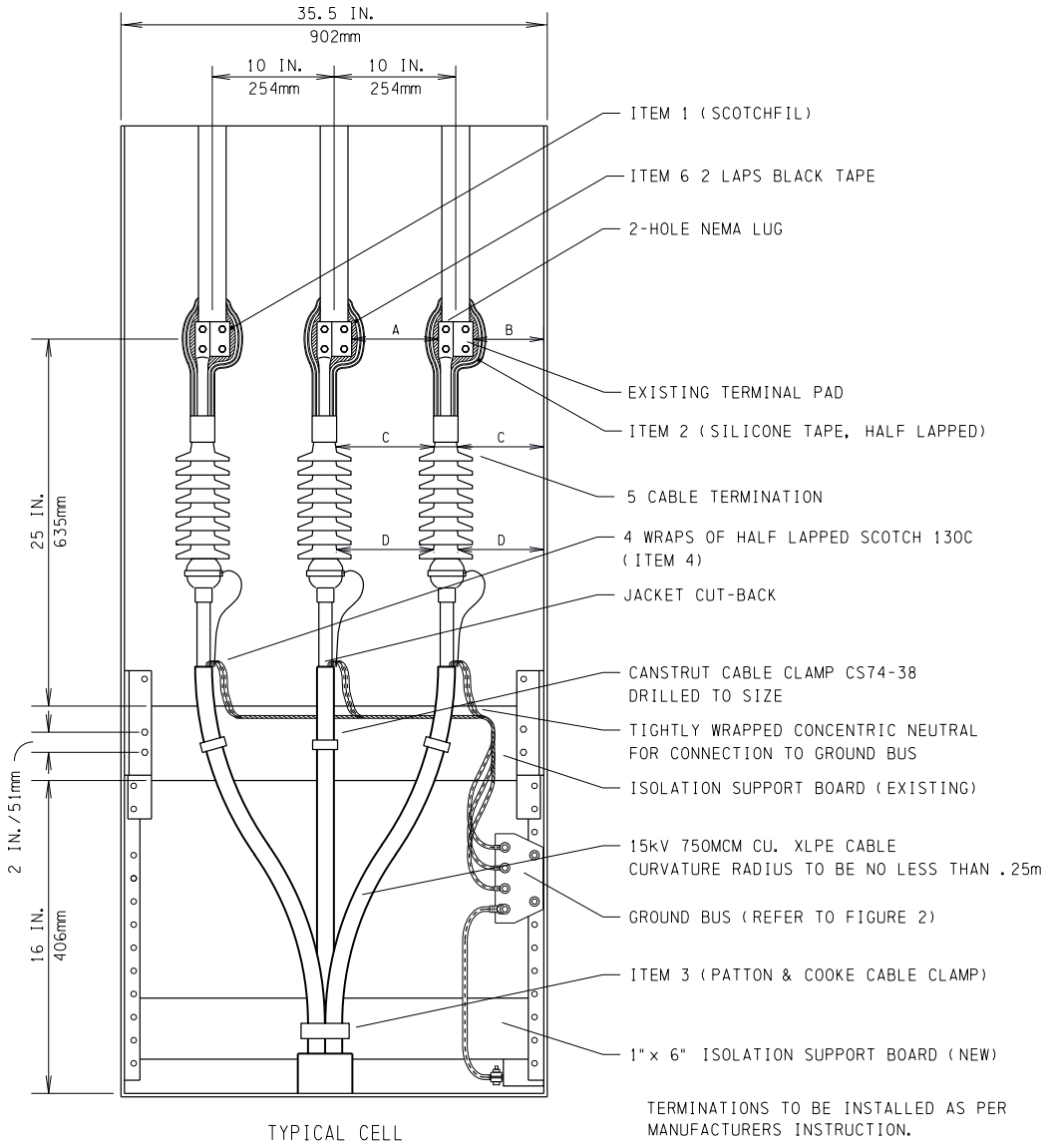

TYPICAL CELL

TERMINATIONS TO BE INSTALLED AS PER MANUFACTURERS INSTRUCTION.

PERMIT TO PRACTICE
EPCOR DISTRIBUTION & TRANSMISSION INC
RM SIGNATURE: Catherine Wagner
RM APEGA ID #: 67305
DATE: 2022-01-17
PERMIT NUMBER: P007061
The Association of Professional Engineers and Geoscientists of Alberta (APEGA)

EPCOR
APEGA PERMIT P7061
UNDERGROUND DISTRIBUTION STANDARDS

I confirmed; ~~M65739~~

PROFESSIONAL ENGINEER CARLO M. RECTO ALBERTA

REVIEWED BY STANDARDS COMMITTEE:	YEAR-MM-DD
DRAFTED BY:	R. LAWRIE
DESIGNED BY:	C. M. RECTO
SCALE:	N.T.S.
DATE REVISED:	2022-01-10

CABLE TERMINATIONS IN CUSTOMER-OWNED SWITCHGEAR

STANDARD NO. 63 00 07 15 48 238

PAGE NO. 2/ 6

2022-01-10

DRAWING 7.1

Δ CABLE TERMINATIONS IN CUSTOMER-OWNED SWITCHGEAR PAGE 3/6

TERMINATOR SPACING REQUIREMENTS

SEE FIG. 1 FOR DIAGRAM REFERENCE

STOCK NUMBER	TYPE	INSULATION LEVEL	PHASE-TO-PHASE EXPOSED LIVE PARTS (A)	PHASE-TO-GROUND EXPOSED LIVE PARTS (B)	INSULATED TERMINATION HIGH STRESS SEGMENT, PHASE-TO-PHASE, OR PHASE-TO-GROUND (C)	INSULATED TERMINATION LOWER POTENTIAL (D)
74315	3M QT II/QT III TERMINATOR KIT	15KV	190 mm	127 mm	30 mm	20 mm
26617	RAYCHEM/TE TFT-151E-G	15KV	175 mm	100 mm	35 mm	23 mm
26616	RAYCHEM/TE TFT-153E-G	15KV	175 mm	100 mm	35 mm	23 mm
75212	3M QT II/QT III TERMINATOR KIT	25KV	267 mm	190 mm	35 mm	23 mm
NA	RAYCHEM/TE	25KV	225 mm	150 mm	40 mm	25 mm

BUS COVER REQUIREMENTS

1. PREFERRED INSULATION SCHEME FOR THE BUS AND LIVE PARTS IS CUSTOM BUS COVERS MANUFACTURED BY A THIRD PARTY FOR PROPER FIT.
2. TAPING THE BUS IS NOT PREFERRED BUT MAY BE ALLOWED AS AN ALTERNATIVE IN SOME CASES. THIS REQUIRES ENGINEERING APPROVAL.
   SPECIFIC REQUIREMENTS:
   A. FIRST INSTALL A LAYER OF IRRATHENE TAPE (S/N 49716)
   B. SECOND LAYER IS INSULATION PUTTY (S/N 35952) OVER THE IRRATHENE TAPE.
   C. THIRD LAYER IS RUBBER TAPE (S/N 52125 OR S/N 56010)
3. EXCEPTIONS TO BUS COVER REQUIREMENTS MAY BE CONSIDERED ON A CASE-BY-CASE BASIS AND REQUIRES ENGINEERING APPROVAL.

EPCOR
APEGA PERMIT P7061
UNDERGROUND DISTRIBUTION STANDARDS

REVIEWED BY STANDARDS COMMITTEE:	YEAR-MM-DD
DRAFTED BY:	R. LAWRIE
DESIGNED BY:	C. M. RECTO
SCALE:	N.T.S.
DATE REVISED:	2022-01-10

I confirmed; M65739

PROFESSIONAL ENGINEER CARLO M. RECTO ALBERTA

PERMIT TO PRACTICE
EPCOR DISTRIBUTION & TRANSMISSION INC
RM SIGNATURE: Catherine Wagner
RM APEGA ID #: 67305
DATE: 2022-01-17
PERMIT NUMBER: P007061
The Association of Professional Engineers and Geoscientists of Alberta (APEGA)

CABLE TERMINATIONS IN CUSTOMER-OWNED SWITCHGEAR

STANDARD NO. 63 00 07 15 48 238

PAGE NO. 3/ 6

2022-01-10

DRAWING 7.1

Δ CABLE TERMINATIONS IN CUSTOMER-OWNED SWITCHGEAR PAGE 4/6

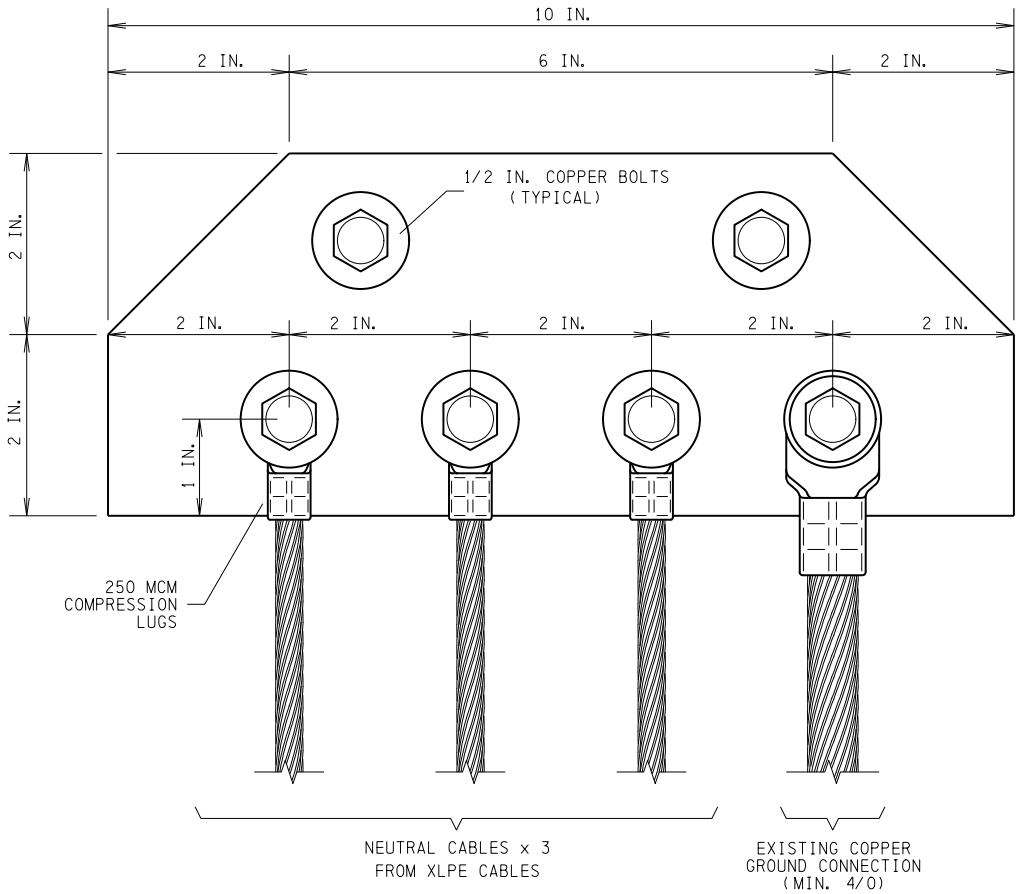

FIGURE 2 - SUBSTATION SWITCHGEAR CELL
TYPICAL GROUNDING BUS ARRANGEMENT
(GROUND BUSS 1/4 IN. COPPER)

EPCOR
APEGA PERMIT P7061
UNDERGROUND
DISTRIBUTION STANDARDS

REVIEWED BY STANDARDS COMMITTEE:	YEAR-MM-DD
DRAFTED BY:	R. LAWRIE
DESIGNED BY:	C. M. RECTO
SCALE:	N. T. S.
DATE REVISED:	2022-01-10

I verified: M65739

PROFESSIONAL ENGINEER ALBERTA
CARLO M. RECTO

PERMIT TO PRACTICE
EPCOR DISTRIBUTION & TRANSMISSION INC
FIRM SIGNATURE:
FIRM APEGA ID #: 67305
DATE: 2022-01-17
PERMIT NUMBER: P007061
The Association of Professional Engineers and Geoscientists of Alberta (APEGA)

CABLE TERMINATIONS
IN CUSTOMER-OWNED
SWITCHGEAR

STANDARD NO. 63 00 07 15 48 238

PAGE NO. 4/ 6

2022-01-10

DRAWING 7.1

Δ CABLE TERMINATIONS IN CUSTOMER-OWNED SWITCHGEAR PAGE 5/6

LIST OF CUSTOMER SWITCHGEAR AND SWITCHGEAR CELL OBSOLETE STANDARDS FOR SPECIFIC REFERENCE

NOTE: OBSOLETE STANDARDS ARE FOR RECORDS ONLY. THESE STANDARDS ARE NO LONGER REVIEWED OR REVISED

PILC IN POTHEADS

6300071542255 - INSTALLATION AND TERMINATION OF 1-3/C 250 MCM 15 kV PILC CABLE IN SWITCHGEAR CELL
6300071542256 - INSTALLATION AND TERMINATION OF 1-3/C 500 MCM 15 kV PILC CABLE IN SWITCHGEAR CELL
6300071542257 - INSTALLATION AND TERMINATION OF 1-3/C 750 MCM 15 kV PILC CABLE IN SWITCHGEAR CELL
6300071542260 - INSTALLATION AND TERMINATION OF 1-3/C 250 MCM 15 kV PILC CABLE IN CUSTOMER SWITCHGEAR
6300071542261 - INSTALLATION AND TERMINATION OF 1-3/C 500 MCM 15 kV PILC CABLE IN CUSTOMER SWITCHGEAR
6300071542262 - INSTALLATION AND TERMINATION OF 1-3/C 750 MCM 15 kV PILC CABLE IN CUSTOMER SWITCHGEAR
6300071542270 - INSTALLATION AND TERMINATION OF 1-3/C 500 MCM 15 kV PILC CABLE TO POTHEAD IN SWITCHING CUBICLE DEEP BASEMENT
6300071542271 - INSTALLATION AND TERMINATION OF 1-3/C 750 MCM 15 kV PILC CABLE TO POTHEAD IN SWITCHING CUBICLE DEEP BASEMENT

SOLID DIELECTRIC CABLES

6300071542258 - INSTALLATION AND TERMINATION OF 3-1/C 500 MCM 15 kV XLPE CABLE IN SWITCHGEAR CELL
6300071542259 - INSTALLATION AND TERMINATION OF 3-1/C 750 MCM 15 kV XLPE CABLE IN SWITCHGEAR CELL
6300071542265 - INSTALLATION AND TERMINATION OF 3-1/C #2 Al 15 kV XLPE CABLE IN CUSTOMER SWITCHGEAR
6300071542266 - INSTALLATION AND TERMINATION OF 3-1/C #1/0 Al 15 kV XLPE CABLE IN CUSTOMER SWITCHGEAR
6300071542267 - INSTALLATION AND TERMINATION OF 3-1/C 350 MCM Al 15 kV XLPE CABLE IN CUSTOMER SWITCHGEAR
6300071542286 - INSTALLATION AND TERMINATION OF 3-1/C 750 MCM 15 kV LC SHIELD CABLE IN CUSTOMER SWITCHGEAR OR CUBICLE
6300071582259 - INSTALLATION AND TERMINATION OF 3-1/C 750 MCM Al 15 kV XLPE CABLE IN SUBSTATION

EPCOR
APEGA PERMIT P7061
UNDERGROUND DISTRIBUTION STANDARDS

I am the author: M65739

PROFESSIONAL ENGINEER CARLO M. RECTO ALBERTA

PERMIT TO PRACTICE
EPCOR DISTRIBUTION & TRANSMISSION INC
RM SIGNATURE: Catherine Wagner
RM APEGA ID #: 67305
DATE: 2022-01-17
PERMIT NUMBER: P007061
The Association of Professional Engineers and Geoscientists of Alberta (APEGA)

REVIEWED BY STANDARDS COMMITTEE:	YEAR-MM-DD
DRAFTED BY:	R. LAWRIE
DESIGNED BY:	C. M. RECTO
SCALE:	N.T.S.
DATE REVISED:	2022-01-10

CABLE TERMINATIONS IN CUSTOMER-OWNED SWITCHGEAR

STANDARD NO. 63 00 07 15 48 238

PAGE NO. 5/ 6

2022-01-10

DRAWING 7.1

Δ CABLE TERMINATIONS IN CUSTOMER-OWNED SWITCHGEAR PAGE 6/6

ITEM	PART DESCRIPTION	STOCK No.	QTY.
1	TAPE ELECTRICAL 1*" x 60" INSULATION PUTTY 3M	35952	A/R
2	TAPE SILICONE NO. 70 RUBBER 3M	25115	A/R
3	CABLE CLAMP, PATTON & COOKE #5M10B-3-1670	NON-STOCK	A/R
4	TAPE SCOTCH 130C 3/4 IN. X 30 FT.	52125	A/R
5	TAPE SCOTCH 130C 1 1/2 IN. X 30 FT.	56010	A/R
6	TAPE IRRATHENE P/N VRI 202 - 0.010	49716	A/R

EPCOR
APEGA PERMIT P7061
UNDERGROUND DISTRIBUTION STANDARDS

REVIEWED BY STANDARDS COMMITTEE: YEAR-MM-DD
DRAFTED BY: R. LAWRIE
DESIGNED BY: C. M. RECTO
SCALE: N.T.S.
DATE REVISED: 2022-01-10

I confirmed: M65739

PROFESSIONAL ENGINEER ALBERTA
CARLO M. RECTO

PERMIT TO PRACTICE
EPCOR DISTRIBUTION & TRANSMISSION INC
RM SIGNATURE:
RM APEGA ID #: 67305
DATE: 2022-01-17
PERMIT NUMBER: P007061
The Association of Professional Engineers and Geoscientists of Alberta (APEGA)

CABLE TERMINATIONS IN CUSTOMER-OWNED SWITCHGEAR

STANDARD NO. 63 00 07 15 48 238

PAGE NO. 6/ 6

2022-01-10

8.0

Network Service

8.1 GENERAL INFORMATION

a. A network service is a 120/208V or 347/600V service connected to EDTI's network system. The network area extends from 97 to 110 Street and from 97 to 104A Avenue in downtown Edmonton. See Drawings 3.1 and 3.2 for details.

b. New or increased 347/600V, 3-phase, 4-wire services fed from the network system will only be supplied if approved by EDTI.

c. Please contact us to confirm the network voltage available in your area.

d. Typical installations include medium to large commercial applications.

e. Please see Table 3.1 – Project Overview for a summary of your responsibilities as the Customer and the responsibilities of EDTI.

f. Many of the new buildings in the network area are fed with a primary or padmount transformer service. If, after consulting with us, you find that this is the case, please see Section 3.5 – Selecting the Service Type.

g. If you decide that you require a feed from EDTI's network system, please complete the Commercial Application Form. See Section 3.3 – Applying for Service for details

h. See Section 12 – Additional Information to learn about such topics as temporary power, splicing, operations, equipment relocation, and pre-inspection checklists.

8.2. SERVICE TYPE GENERAL REQUIREMENTS

a. All service connections under this section must have a fused main switch or main breaker with adequate interrupting capacity installed on the line side of all equipment. This includes meters and metering equipment. See Table 8.1 – Main Switch or Breaker Minimum Interrupting Capacity – Downtown Secondary Network Services for details.

b. Co-generation is not allowed on services connected to EDTI's network system.

8.3 Δ DRAWING REQUIREMENTS

a. Please contact us to determine the application drawing requirements for your project.

b. A drawing showing details of EDTI's cable termination cell, including size, shape, and access door locations, is required.

c. Anticipate the drawing requirements will be similar to those of the Primary Metered Service requirements. See Section 3.3 – Applying for Service for details.

8.4 Δ SERVICE DUCTS

a. All permanent commercial services must be in duct.

b. High Density Polyethylene (HDPE) ducts shall not be permitted, even when certified for the intended use.

c. For residential installations, EDTI highly recommends, and may require, installing any cable that will ultimately end up under a buildings/structure or hard surface in duct. See Drawing 5.3 – Typical Underground Residential Service Installation on Property for a typical underground service installation.

d. All ducts must be equipped with bell collars at their ends to avoid damaging the cable.

e. The Customer will provide all conduits, pull boxes, and manholes required for installing the electrical services on the Customer's property. EDTI approved product shall be used, including rigid PVC, DB2, Carlon Borguard, or Terracon.

f. The Customer cannot install ducts into an energized manhole or handhole.

g. Service conduits installed by contractors working on behalf of other utilities or the City of Edmonton must follow EDTI's construction standards. Contractors must not work within 1.0m of any electrical equipment.

h. When EDTI conduits have been stubbed to the property line, Customers must first confirm that the conduit exposed is the correct one, and then connect their supply conduit to EDTI's conduit. Contact us to arrange for conduit verification.

i. Where gas easements/utility Rights-of-Way exist, the service ducts are to be extended past the gas easement/utility right-of-way and capped.

j. See Table 8.2 – Acceptable Conductors and Conduit Size – Downtown Secondary Network Services for appropriate conductors.

k. If the pulling tension of the cable exceeds its allowable limit, a pull box must be installed. See Section 8.6 – Ground-Mounted Pull Boxes for more information.

l. The Customer shall be responsible for installing and maintaining conduit sealing, and a suitable means of drainage, for ducts entering a building, per the Canadian Electrical Code.

8.5 DUCT BENDS

a. All bends must be made of rigid, thick-walled PVC (Schedule 40) with minimum wall thickness of 6.0mm for a 100mm (4 in.) diameter duct, 6.6mm for a 125mm (5 in.) diameter duct, and 7.1mm for a 150mm (6 in.) diameter duct. DB2 bends are not acceptable.

b. An additional 3,000mm (10 ft.) horizontal section of rigid, thick-walled PVC must be attached to the bend.

c. All bends must be equipped with bell collars to avoid damaging the cable.

d. All spare bends are to be covered (taped or covered by some other suitable method) to prevent material falling into them.

8.6 Δ GROUND-MOUNTED PULL BOXES

a. EDTI reserves the right of final approval of the pull box size and location.

b. Communication cables cannot share the same pull box with primary or secondary cables.

c. Customer-owned facilities cannot share the same pull box with EDTI facilities.

d. If the pulling tension of the cable exceeds its allowable limit, a pull box must be installed. See Drawing 6.1 for details.

e. The cumulative total of all bends between pulling points shall not exceed 360 degrees of bends.

f. The size of the ground-mounted pull box required depends on the type of cable being installed. See Table 6.1 for details.

g. Conduits must enter and leave the pull box at the same level.

h. All bends entering/exiting pullboxes, manholes, or vaults must be made of rigid, thick-walled PVC (Schedule 40) with minimum wall thickness of 6.0mm for a 100mm (4 in.) diameter duct, 6.6mm for a 125mm (5 in.) diameter duct, and 7.1mm for a 150mm (6 in.) diameter duct. DB2 bends are not acceptable.

8.7 Δ PULL BOXES IN BUILDINGS

a. EDTI reserves the right of final approval of the pull box size and location.

   i. Pull boxes in buildings must be sized according to EDTI requirements, and shall only be permitted in the electrical room.

   ii. When installed, pull boxes shall be lockable and be clearly marked “EPCOR Access Only”.

   iii. Contact us to discuss your specific installation.

b. Communication cables cannot share the same pull box with primary or secondary cables.

c. Customer-owned facilities cannot share the same pull box with EDTI facilities.

d. If pulling lengths exceed the maximum pulling tension of the cable, a pull box must be installed.

e. The cumulative total of all bends between pulling points shall not exceed 360 degrees of bends.

8.8 CONDUCTORS

a. EDTI will supply and install the secondary cable for all services connected to EDTI’s network system.

b. The 7-conductor (7/C) network service cable is a multiplexed cable rated at 400A. It consists of six #4/0 CU conductors (two per phase) with one # 500 MCM CU. XLPE USEI 90 cable neutral.

c. For network services 400A and larger, EDTI will supply and install parallel runs of network service cable. (One 7/C run is 400A, two 7/C runs are 800A, three 7/C runs are 1,200A, and four 7/C runs are 1,600A.)

d. See Table 8.2 – Acceptable Conductors and Conduit Size – Downtown Secondary Network Services for appropriate conductors.

8.9 CABLE INSTALLATION

a. EDTI will supply and install the secondary cable for all services connected to EDTI's network system.

b. Telephone and television cables can be installed in the same trench as power conductors. Design drawings must be forwarded to the appropriate organizations for their approval.

c. Cable cannot be installed on building footings or weeping tile.

d. The maximum length of service conductors permitted in a building is 3.0m, unless they are mechanically protected in rigid metal conduit, in which case the maximum is 7.5m.

8.10 Δ TERMINATION

a. A drawing showing details of EDTI's cable termination cell, including size, shape, and access door locations, is required. See Section 8.3 – Drawing Requirements.

b. Provisions shall be made by the Customer for the installation of current limiting fuses on the incoming secondary spades, by EDTI when they terminate the service conductors. Contact us for current limiting fuse details prior to designing switchgear.

c. The Customer's main switch must be equipped with a sufficient number of solderless terminals to allow for terminating the appropriate service conductors. See Table 8.2 – Acceptable Conductors and Conduit Size – Downtown Secondary Network Services for appropriate conductors.

d. The Customer's main disconnect switches must have sufficient #4/0 lugs to accommodate the number of 4/0 CU phase conductors required for rating the service (Allen-key-type terminations at the breaker are not acceptable).

e. EDTI will make all terminations on the line side of the Customer's main switch or breaker.

TABLE 8.1

MAIN SWITCH OR BREAKER MINIMUM INTERRUPTING CAPACITY – DOWNTOWN SECONDARY NETWORK SERVICES

	INTERRUPTING CAPACITY	
MAIN SWITCH OR BREAKER SIZE	120/208V 3-PHASE, 4-WIRE	347/600V 3-PHASE, 4-WIRE
Up to 1,000A	100,000A	100,000A
1,001 - 1,600A	100,000A	100,000A
1,601 - 2,500A	100,000A	100,000A
2,501 - 3,000A	150,000A	100,000A

All the current ratings specified in this table are root-mean-square (RMS) symmetrical values. The minimum interrupting capacity must apply to all components and to the assembly.

TABLE 8.2

Δ ACCEPTABLE CONDUCTORS AND CONDUIT SIZE – DOWNTOWN SECONDARY NETWORK SERVICES

CONDUCTOR SIZE	RATING PER PHASE	CONDUIT SIZE
#2 AWG CU (For 2-phase, 3-wire, or 3-phase, 4-wire)	100A	100mm (4 in.)
4/0 CU	200A	100mm (4 in.)
7-conductor (7/C) network cable consisting of two 4/0 CU per phase and one 500MCM CU XLPE (USEI 90 cable) neutral	400A or Multiples of 400A	100mm (4 in.)

- Conductor shall be cross-link polyethylene insulated with polyvinylchloride jacket.
- For network services 400A and larger, EDTI will supply cable with parallel runs of network service cable.
  - One 7/C run is 400A, two 7/C runs is 800A, three 7/C runs is 1,200A, and four 7/C runs is 1,600A.
- Depending on duct arrangements, pull boxes may be required in the building. For further information, see Section 8.7 – Pull Boxes in Buildings.
- The maximum length of service conductors permitted in a building is 3.0m, unless they are mechanically protected in rigid metal conduit, in which case the maximum is 7.5m.

9.0

Unmetered Service

9.1 Δ GENERAL INFORMATION

a. Unmetered services are only available to the City of Edmonton, telecommunication, and utility companies.

   i. An unmetered service shall only be provided when **ALL** the following conditions are met:

   ii. When in EDTI's sole option, it is not practical to provide a metered service.

   iii. The unmetered load is located within the City of Edmonton road Right-of-Way.

   iv. The connected load is small, consistent, and predictable, and electrical consumption can be easily calculated.

   v. The standard supply voltage is one of the voltage services available from EDTI.

   vi. The maximum current requirements are less than 60A per service connection.

b. Typical installations include streetlights, traffic signals, and small utility services.

c. Please see Table 3.1 for a summary of your responsibilities as the Customer and the responsibilities of EPCOR Distribution and Transmission Inc. (EDTI).

d. If you decide you require an unmetered service, please complete the Unmetered Application Form.

e. See Section 12 – Additional Information to learn about such topics as temporary power, splicing, operations, equipment relocation, and pre-inspection checklists.

9.2 SERVICE TYPE GENERAL REQUIREMENTS

a. Unmetered services are available from EDTI Customer Engineering Services' aerial and underground distribution systems.

   i. Aerial (overhead) services will not be provided in areas served by underground electrical facilities.

b. Customers are responsible for maintaining all civil work they install, including maintaining the level of equipment.

c. EDTI Customer Engineering Services reserves the right at any time to field-measure the unmetered service connection. The Customer or the Customer's retailer will be notified of the field-measured consumption recording, as well as of the accuracy of the measuring devices.

9.2.1 Δ Conversion to Metered Service

a. EDTI reserves the right to require any unmetered service to be reconnected as a metered service connection.

b. EDTI will provide 30 calendar days written notice that an unmetered service is being reconnected as a metered service.

c. Customers have the option of installing an EDTI-approved meter socket at a location acceptable to EDTI, and applying for reconnection as a metered service connection; or, discontinuing the unmetered service.

   i. Failure to reply within 30 calendar days of written notice being provided, will result in the unmetered service being disconnected. The services will remain disconnected until reconnection as a metered service is requested by the Customer.

d. The Customer will pay the cost of reconnection, including an approved meter base, protective housing, and ancillary equipment.

e. EDTI will provide the meter and will notify the Customer where the meter base and protective housing are to be located.

9.2.2 Streetlighting

a. The City of Edmonton is typically the owner and operator of all streetlight systems within the City's road rights-of-way.

b. The City of Edmonton reviews developer drawings to ensure the streetlight designs and layouts adhere to standards stated in the most recent publication of the City of Edmonton Servicing Standards Manual.

c. City of Edmonton-approved engineering drawings for the complete streetlight installation shall be supplied.

d. The Customer shall ensure that grounding installed for street light disconnect is bonded to ground for an existing distribution transformer, both underground and on the pole near the disconnect device.

e. For pole-mounted installations, ensure that the new relay installation maintains the required 1.0m of clearance from any communication installation.

9.2.3 Δ Lane Lighting (Alley Lighting)

a. Requests for lane lighting must be made by contacting the City of Edmonton.

b. To inquire about existing lane lighting systems, please contact the City of Edmonton.

c. All new lane lighting additions, and modifications to existing security lighting systems must be metered and installed as per Part 1 of the Canadian Electrical Code.

9.2.4 Δ Security Lighting (Public & Private)

a. All new security lighting, additions, and modifications to existing security lighting systems must be metered and installed as per Part 1 of the Canadian Electrical Code.

b. No new private security lighting installations, additions, or modifications shall be permitted.

c. To inquire about existing EDTI security lighting systems, please contact us.

d. To request disconnection of existing security lighting, first contact the retailer to have billing stopped, and then contact us.

9.3 Δ AS-BUILT DRAWING REQUIREMENTS

a. Once construction is complete, submit as-built information to EDTI.

b. As-built drawings, authenticated drawings prepared by a Professional Engineer registered in the Province of Alberta with APEGA are to be forwarded to EDTI before energization.

c. As-built drawings are to confirm the Customer's installation, including equipment and conductor specifications. Equipment and conductor locations are to be drawn to scale, with dimensions or coordinates. Any revision to the original design must be indicated on the drawing.

9.4 Δ SERVICING LOCATION

a. It is critical that you receive approval from EDTI for your site-specific servicing location before beginning construction. This location can differ based on a number of circumstances.

b. The Customer will designate the service pole, pedestal, or transformer they would prefer to connect to. EDTI in its sole option will then make the final determination of the servicing location. **The EDTI final location is required prior to start of construction.**

c. See Section 3.7 – Service Entry Point for further details.

9.5 Δ SERVICE DUCTS (UNDERGROUND)

a. High Density Polyethylene (HDPE) ducts shall not be permitted, even when certified for the intended use.

b. All ducts must be equipped with bell collars at their ends to avoid damaging the cable.

c. Cable that will ultimately end up under roads, driveways, decks, etc. must be installed in duct.

d. Duct must be installed where cable under EDTI control is deemed inaccessible.

e. The Customer will provide all conduits, pull boxes, and manholes required for installing the electrical services to the Unmetered Service. EDTI approved product shall be used, including rigid PVC, DB2, Carlon Borguard, or Terracon.

f. The Customer cannot install ducts into an energized manhole or handhole.

g. Service conduits installed by contractors working on behalf of other utilities or the City of Edmonton must follow EDTI's construction standards. Contractors must not work within 1.0m of any electrical equipment.

h. When EDTI conduits have been stubbed, Customers must first confirm that the conduit exposed is the correct one, and then connect their supply conduit to EDTI's conduit. Contact us to arrange for conduit verification.

i. The Customer shall be responsible for installing and maintaining conduit sealing, and a suitable means of drainage, for ducts entering a building, per the Canadian Electrical Code.

9.6 DUCT BENDS (UNDERGROUND)

a. All bends exiting transformers and cubicles must be made of rigid, thick-walled PVC (Schedule 40) with minimum wall thickness of 6.0mm for a 100mm (4 in.) diameter duct, 6.6mm for a 125mm (5 in.) diameter duct, and 7.1mm for a 150mm (6 in.) diameter duct. DB2 bends are not acceptable.

b. An additional 3,000mm (10 ft.) horizontal section of rigid, thick-walled PVC must be attached to the bend.

c. The secondary ducts must be aligned directly underneath the secondary transformer bushings and centered within the base opening, per Drawings 6.3 and 6.4. The conduit bends must exit the earth at 90 degrees.

d. All bends must be equipped with bell collars to avoid damaging the cable.

e. All spare bends are to be covered (taped or covered by some other suitable method) to prevent material falling into them.

9.7 CONDUCTORS (UNDERGROUND)

a. #8 RW90 cable is acceptable for streetlight and traffic supply conductors (60A max), or per Table 5.1 as required.

b. Armoured or metal-sheathed (TECK) cable cannot be used for permanent services.

c. With EDTI permission, TECK cable can be used for temporary installations. The Customer must supply all associated fittings, including connectors, grounding bushings, and weatherheads. See Section 12.5 – Temporary Connections for details.

9.8 Δ CABLE INSTALLATION (UNDERGROUND)

a. Telephone and television cables can be installed in the same trench as power conductors. Design drawings must be forwarded to the appropriate organizations for their approval.

b. Cable cannot be installed on building footings or weeping tile.

c. Secondary cable ends must have heat shrink caps.

d. EDTI will make the final connection in the cubicle, transformer, or pedestal.

   i. Terminations must be done by journeymen power electricians and linemen. All workers require certification as qualified electrical utility personnel.

e. EDTI will energized the unmetered service upon receipt of as-built plan(s), permit(s), and inspection approval(s).

f. Customers will supply and install secondary conductors to 1.0m from the ground grid, leaving a neatly bound coil of a length specified by EDTI.

g. A maximum of six runs of secondary conductors, are permitted for all single phase padmount transformers; except for multifamily installations with pedestals where the limit shall be nine, and for single family installations where the limit shall be twelve.

h. A maximum of six runs of secondary conductors total (includes both permanent and temporary services) are permitted for 3-phase padmount transformers up to 750kVA.

9.9 Δ CABLE IDENTIFICATION (UNDERGROUND)

a. The Customer will identify service conductors at the transformer by the owner's name and use of the Unmetered Service (street lights, traffic lights, booster, etc.) by using long-life ink on a tie-wrap attached to the conductors.

9.10 Δ ATTACHMENT METHODS (OVERHEAD)

a. EDTI reserves the right to require that the attachment point be adjusted to minimize or eliminate a service trespass to neighbouring properties, including those properties owned by the Customer if on a separate title.

b. A Customer shall not move their service connection as to cause the conductor to pass over another property.

c. The attachment point for the electrical service must be above any communication services.

d. Where the Unmetered Service attachment is not located on the pole line:

   i. Attachment devices must be secured to withstand the service wire pulling tension requirements.

   ii. The attachment point and weatherhead must face the pole line and as close as is practical to the service pole (minimum 3.0m clearance to service pole).

   iii. The attachment shall be vertical, unless prior permission has be obtained from the City of Edmonton and EDTI to place it horizontally.

      a. Horizontal attachments may be used to increase clearances, depending on the angle of pull from the pole to the building. If you're not sure if you can use a horizontal attachment, request guidance from the City of Edmonton and EDTI.

   iv. The attachment point is to be a maximum of 6.0m from final grade and must be accessible by a ladder.

   v. The weatherhead must be above the attachment point.

   vi. Ensure the vertical distance between the attachment point and the weatherhead is a minimum of 150mm and a maximum of 300mm.

   vii. Ensure the horizontal distance between the attachment point and the weatherhead is a minimum of 300mm and a maximum of 1000mm.

   viii. A minimum vertical clearance of 0.6m and a minimum horizontal clearance of 1.0m must be maintained between attachment devices.

9.11 Δ WIRE INSTALLATION (OVERHEAD)

a. EDTI will make the final connection.

b. Services exceeding the maximum spans noted in Table 4.1 may require an intermediate pole, or the Customer will have to redesign the service an underground system.

c. EDTI will supply and install up to 30.0m of service wire, according to spans noted in Table 4.1, and make all terminations at the weatherhead, once inspection approval is received.

d. The maximum length of service conductors permitted in a building is 3.0m, unless they are mechanically protected in rigid metal conduit, in which case the maximum is 7.5m.

10.0

Metering

One of the most important parts of your construction is correctly installing the meter so that it will accurately measure the amount of electricity you use.

Each following section outlines the specific metering requirements based on the type of service you are installing. Please see the applicable metering section below.

The Customer electrical service shall be metered at the voltage supplied by EDTI.

10.1 CONTACT FOR METERING DISCONNECTIONS AND RECONNECTIONS

For service changes and upgrades, the Customer's contractor will coordinate the disconnection and reconnection of the service with EDTI's Meter Operations.

Please call (780) 412-3288 or email customercare@epcor.com to arrange disconnection/reconnection.

10.2 Δ REQUESTING METERING TRANSFORMERS (600V OR LESS)

To request EDTI metering transformers for your service, send an email to customercare@epcor.com with the following information:

a. Subject Line: "CT-PT req." followed by the address and permit number.

b. Billing Permit Address. (It is critical this is correct.)

c. Please include a note stating if the work is for an existing service, if there has been an upgrade or downgrade to the service, or no change is being made to the service (e.g. rewire/renovation/etc.).

   i. The existing EDTI meter number.

d. Sub-service amperage (or setting if not the same) and voltage.

   i. If your amperage is between 1,000-1,600A, state if you prefer donut or bar type units.

After receiving your request, EDTI will confirm metering transformer availability. They will notify you by a reply email when and where the metering transformers may be picked up.

Only send one email per permit/request.

10.3 Δ GENERAL REQUIREMENTS

a. The Customer is to supply the meter socket.

b. The installations of meters shall align to the legal property titles, entities of ownership, or use of service, as EDTI determines in its sole option.

c. The Customer is responsible for installing meter bases on private property.

d. The metering equipment must be installed on the load side of the main disconnect, unless noted otherwise.

e. Metering is not supplied on the secondary side of Customer-owned transformers.

f. No junction box, or other point of disconnect, shall be allowed between the service entrance and the meter socket lugs.

   i. This shall not apply where a junction box is required to pull in a service, or to provide a drain point. EDTI's written permission is required for the junction box in both of these cases.

g. The service will not be energized unless the meter socket and the service conduit are attached to the permanent structure.

h. Meter sockets must also be in a location acceptable to the inspection authority and EDTI.

i. The meter must be placed in a location that EDTI can access at all times. Access to EDTI meters shall not be restricted, unless contained within a building.

j. Meter sockets cannot be recessed into walls, enclosed, boxed in, or otherwise obstructed in a way that would impede removal, reading, testing, or reinstallation.

k. All electrical equipment must bear the evidence-of-approval marking of certification organizations that are recognized by the Standards Council of Canada and acceptable to EDTI.

l. Where lockable disconnects are required, the main disconnect itself shall be lockable – lockable covers shall not be used in lieu, unless integral to the device.

m. The meter socket for single phase services that are 100A and larger must be a minimum of 300mm high, 190mm wide, and 100mm deep so it meets the minimum bending radius of the aluminum secondary conductors – unless noted otherwise.

n. Where multi-meter installations are installed, each individual meter socket and disconnect shall be labelled using a Lamicoid with the corresponding address.

   i. Lamicoids must be applied prior to inspection, if the Lamicoid is not present at the time of inspection, the inspection will not be passed and re-inspection fees will apply.

10.4 Δ RESIDENTIAL – 200 AMPS OR LESS

a. Meter sockets must be located outdoors on the exterior of the house or garage to provide unimpeded access at all times to anyone installing, changing, testing, or reading the metering equipment.

b. Meter sockets cannot be located in proximity to sundecks, balconies, carports, or breezeways that could be enclosed in the future.

c. The Customer will not enclose a meter socket without a written variance from EDTI. If a variance is given, the Customer is responsible for all costs associated with relocating the meter to an accessible location. See Section 1.6 – Variances for details.

d. When electrical services are supplied by an underground service conductor larger than 1/0 CN, the meter socket must be a minimum of 400mm high, 280mm wide, and 100mm deep.

e. For underground fed facilities only, the contractor is to make the termination on the load side of the meter socket. EDTI requires 450mm of service conductor to be left above the meter socket for termination purposes.

f. Existing 60A services may maintain the use of the round meter sockets only on services using #6 AWG or smaller.

g. The meter socket shall be installed on the line side of the main disconnect – exceptions apply for multi-family with multi-meter installations, see below for details.

h. Multi-Family with Multi-Meter requirements:

   i. If the service conductors are fed directly from a **transformer** and run to a **multi-meter socket** on the side of a multi-family unit, they must be limited to four consumer services on that building. The multi-meter sockets shall not have their own individual lockable service switch on the line side of the meter socket; however, a disconnecting device shall be installed on the load side of each meter socket.

   ii. If the service conductors are fed directly from a **Customer service pedestal** and run to a **multi-meter socket** on the side of a multi-family unit, they must be limited to four consumer services on that building. The multi-meter sockets do not need to each have their own individual lockable service switch on the line side of the meter socket; however, a protective disconnecting device with corresponding ampacity shall precede the multi-meter sockets on the line side, and a disconnecting device shall be installed on the load side of each meter socket.

   iii. If the service conductors are fed directly from a **transformer** or a **Customer service pedestal** and run to a splitter on the side of a multi-family unit, the splitter shall have a service disconnect switch with corresponding ampacity preceding it, and the meter sockets fed from that splitter must each have their own individual lockable service switch, per Drawing 10.1 – Multi-Meter Installation.

   iv. It is the Customer's responsibility to ensure that each metering sockets is labelled with the corresponding unit number.

i. When Customers are installing a combination main breaker and meter socket, Image 10.1 – Acceptable Combination Main Breaker and Meter Socket is the only type of box that is acceptable for underground fed services. The underground cable must extend through the gutter on the right side in the top section of the enclosure. Microelectric has two models that are acceptable: Model #C01-100G for 100A and Model #C02-200G for 200A – approved alternatives may be granted upon review and acceptance by EDTI Metering.

j. Customers may cut in and terminate to the line side of the meter socket. When doing so, the following requirements shall be adhered to:

   i. All conductors are to be tucked to the side of the enclosure and the run to the top of the meter enclosure prior to coming down to the termination points.

   ii. The neutral conductor shall be either equipped with a white insulated sleeve or taped white for its entirety within the enclosure.

   iii. The jacket of the conductor shall be trimmed as close as possible to the connector while still extending through.

   iv. The load side conductor length shall be kept to a minimum, but allowing enough conductor to terminate in a neat and orderly fashion.

   v. See Image 10.2 – Examples of Residential Line Side Meter Termination for an example.

10.5 Δ RESIDENTIAL – GREATER THAN 200 AMPS

a. Meter sockets must be located outdoors on the exterior of the house or garage to provide unimpeded access at all times to anyone installing, changing, testing, or reading the metering equipment.

b. For all transformer-rated services, the meter socket in Drawing 10.2 – Meter and Test Block Enclosure – Current Transformer Rate Meter Socket must be used. The socket must be Thomas & Betts Cat. #CT113-SWL, #CT108-SWL, or an approved equivalent with a 13 or 8 jaw meter socket and test switch. The test switch must be pre-wired.

c. Meter socket and instrument enclosures must conform to the sizes noted in Table 10.1 – Meter Socket and Instrument Enclosures. See Drawing 10.2 – Meter and Test Block Enclosure – Current Transformer Rate Meter Socket for the meter and test block enclosure.

d. The meter socket and instrument transformer enclosure must be connected by a 32mm (1.25 in.) conduit or raceway and shall not include any LBs, if possible. The conduit or raceway must only contain the wires used for the meter installation. The total length of conduit from the metering transformer to the meter cannot exceed 6.5m.

e. The conduit must enter the enclosure as identified in Drawing 10.4 – Instrument Transformer Metering Layout, using approved factory provided knockouts.

f. The instrument transformer enclosure cannot be located within a residence. It must be located outdoors in a weatherproof enclosure or, for aesthetics, it may be mounted inside the garage.

g. The instrument transformer enclosure must only contain the metering transformer installation. The conduit entering the enclosure must not interfere with the installation of any primary wires, the transformer, or the enclosure cover. The conduits carrying the main service conductors must also enter the enclosure in a way that won't interfere with installing conductors to the metering cabinet.

h. Current transformers must be mounted on the inside back wall of the instrument transformer enclosure and have the polarity marks on the line side, as per Drawing 10.3 – Three Phase Instrument Transformers for Installations Over 200A – Enclosure Layout Diagram. Mounting must allow for removing the current transformers without needing to remove the enclosure.

i. Rigid bus and suitable insulators must be used on all services over 600A. The bus must be continuous from the main switch to the current transformers and from the transformers to sub-switching or splitter bars.

j. Service conductors can be used on services 600A or less; however, a short piece of rigid bus and suitable insulators are to be connected on either side of the current transformers, per Drawing 10.3 – Three Phase Instrument Transformers for Installations Over 200A – Enclosure Layout Diagram – for examples see Image 10.3 – Examples of 3-Phase Metering Transformer Installations. The service conductor shall not exceed 500MCM AL or 350MCM CU in size. This requires a custom metering transformer enclosure. A drawing of the enclosure must be submitted to EDTI prior to construction approval – the drawing shall be authenticated by a Professional Engineer registered in the Province of Alberta, or be accompanied by proof of CSA certification.

k. All metering transformer enclosures shall bare a valid certification mark for the enclosure and bus bar kit, with relevant manufacturer name and model number clearly listed.

l. For any service over 600A, the metering transformer compartment shall be part of the manufactured switchgear assembly.

m. All meter sockets and instrument transformer enclosures must be securely mounted plumb, level, and clear of all objects, and conform to Drawings 10.3, 10.4, and 10.5.

10.6 Δ COMMERCIAL – 200 AMPS OR LESS

a. For single-meter installations where the service voltage is 120/240V, 120/208V, or 240V Delta, and 200A or less, the meter socket must be installed on the line side of the main disconnect and on the outside of the building.

b. For single-meter installations where the service voltage is 277/480V or 347/600V, and 200A or less, the meter socket must be installed on the outside of the building and on the load side of the main disconnect.

c. When electrical services are supplied by an underground service conductor larger than a 1/0 CN, the meter socket must be a minimum of 400mm high, 280mm wide, and 100mm deep.

d. Existing 60A services may maintain the use of the round meter sockets only on services using #6 AWG or smaller. Does not apply to multi-meter installations.

e. For single-meter installations on public property where the service voltage is 120/240V, and 200A or less, the Customer shall install a combination utility meter socket/distribution panel (meter/panel) pedestal, affixed to a concrete base per the manufactures specification. The meter/panel pedestal shall be equipped with a PVC riser, be service entrance rated with a main circuit breaker on the load side of the meter, and be fully CSA certified (e.g. AC Dandy Model# DMSB2-1-200-240). Customer shall provide product information to EDTI for review and acceptance prior to installation. **This option is only available to the City of Edmonton, utilities, and telecommunication companies.**

f. In multiple-meter installations, each meter must be installed on the load side of its own lockable disconnecting device, as depicted in Drawing 10.1 – Multi-Meter Installation. The disconnecting device must not interrupt service to any other meter.

g. The main disconnect device may be either a fused switch or a breaker suitable for service entry. These disconnects must have the supply voltage clearly marked (e.g. 480V, 600V). This is not applicable to multi-family units and mobile home parks.

10.7 Δ COMMERCIAL – GREATER THAN 200 AMPS

a. Metering equipment must be installed on the load side of the main disconnect.

b. When a main feeder and a standby feeder are provided to one site, they must be separately metered. The metering must be installed on the line side of the Customer's transfer switch.

c. In cubicles containing switches or air circuit breakers over 600A, the meter socket must be mounted remote from the switchgear.

d. On outdoor transformer-rated freestanding installations, the meter socket must be mounted on supports remote from the switchgear.

e. For all transformer-rated services, the meter socket in Drawing 10.2 – Meter and Test Block Enclosure – Current Transformer Rate Meter Socket must be used. The socket must be Thomas & Betts Cat. # CT113-SWL, or an approved equivalent with a 10-pole test switch and 13-jaw meter socket. The test switch must be pre-wired. The socket must be CSA-approved.

f. Meter socket and instrument enclosures must conform to the sizes noted in Table 10.1 – Meter Socket and Instrument Enclosures. See Drawing 10.2 – Meter and Test Block Enclosure – Current Transformer Rate Meter Socket for the meter and test block enclosure.

g. The meter socket and instrument transformer enclosure must be connected by a 32mm (1.25 in.) conduit or raceway and shall not include any LBs, if possible. The conduit or raceway must only contain the wires used for the meter installation. The total length of conduit from the metering transformer to the meter cannot exceed 6.5m. The conduit must enter the enclosure as identified in Drawing 10.4 – Instrument Transformer Metering Layout, using approved factory provided knockouts.

h. The instrument transformer enclosure must only contain the metering transformer installation. The conduit entering the enclosure cannot interfere with the installation of any of the conductors, the transformer, or the enclosure cover. The conduits carrying the main service conductors must also enter the enclosure in a way that won't interfere with the installation of the conductors to the metering cabinet.

i. In multiple-meter installations, each meter must be installed on the load side of its own lockable disconnecting device. The disconnecting device must not interrupt service to any other meter.

j. The metering instrument enclosure must have a hinged access door, or hinged doors to allow for installing and inspecting meter equipment.

k. Current transformers must be mounted on the inside back wall of the instrument transformer enclosure and have the polarity marks on the line side, as per Drawing 10.3 – Three Phase Instrument Transformers for Installations Over 200A – Enclosure Layout Diagram – for examples see Image 10.3 – Examples of 3-Phase Metering Transformer Installations. Mounting must allow for removing the current transformers without needing to remove the enclosure.

l. Potential transformers should be mounted on the bracket supplied. If no brackets are supplied, the transformers shall be mounted on the back, sides, or bottom of the cabinet and shall be spaced to provide ease of wiring (approximately 100mm).

m. The path for the metering transformer wiring shall be clearly indicated, with adequate provisions for support of the wiring provided. A removable non-conductive wiring support bar placed in front of the metering transformers with adequate clearance is preferable.

n. Rigid bus and suitable insulators must be used on all services over 600A. The bus must be continuous from the main switch to the current transformers and from the transformers to sub-switching or splitter bars.

o. Service conductors can be used on services 600A or less; however, a short piece of rigid bus and suitable insulators are to be connected on either side of the current transformers, per Drawing 10.3 – Three Phase Instrument Transformers for Installations Over 200A – Enclosure Layout Diagram – for examples see Image 10.3 – Examples of 3-Phase Metering Transformer Installations. The service conductor shall not exceed 500MCM AL or 350MCM CU in size. This requires a custom metering transformer enclosure. A drawing of the enclosure must be submitted to EDTI prior to construction approval – the drawing shall be authenticated by a Professional Engineer registered in the Province of Alberta, or be accompanied by proof of CSA certification.

p. All metering transformer enclosures shall bare a valid certification mark for the enclosure and bus bar kit, with relevant manufacturer name and model number clearly listed.

q. For any service over 600A, the metering transformer compartment shall be part of the manufactured switchgear assembly.

r. All meter sockets and instrument transformer enclosures must be securely mounted plumb, level, and clear of all objects, and conform to Drawings 10.3, 10.4 and 10.5.

10.8 Δ NETWORK AREA – 200 AMPS OR LESS

a. For a single-meter installation where the service required is 120/208V, 2-phase, 3-wire, a 5-jaw meter socket (Drawing 10.1 – Multi-Meter Installation) must be installed on the load side of the main disconnect and on the outside of the building.

b. When the service voltage is 347/600V, the meter socket must be installed on the outside of the building on the load side of the main disconnect.

c. When electrical services are supplied by an underground service conductor larger than a 1/0 CN, the meter socket must be a minimum of 400mm high, 280mm wide, and 100mm deep.

d. Existing 60A services may maintain the use of the round meter sockets only on services using #6 AWG or smaller.

e. In multiple meter installations, each meter must be installed on the load side of its own lockable disconnecting device, as depicted in Drawing 10.1 – Multi-Meter Installation. The disconnecting device must not interrupt service to any other meter.

f. The main disconnect device may be a fused switch or a breaker suitable for service entry. These meter bases must have the supply voltage clearly marked (e.g. 600V).

10.9 Δ NETWORK AREA – GREATER THAN 200 AMPS

a. Metering equipment must be installed on the load side of the main disconnect.

b. When a main feeder and a standby feeder are provided to one site, they must be separately metered. The metering must be installed on the line side of the Customer's transfer switch.

c. In cubicles containing switches or air circuit breakers over 600A, the meter socket must be mounted remote from the switchgear.

d. On outdoor transformer-rated freestanding installations, the meter socket must be mounted on supports remote from the switchgear.

e. For all transformer-rated services, the meter socket in Drawing 10.2 – Meter and Test Block Enclosure – Current Transformer Rate Meter Socket must be used. The socket must be Thomas & Betts Cat. # CT113-SWL, or an approved equivalent with a 10-pole test switch and 13-jaw meter socket. The test switch must be pre-wired. The socket must be CSA-approved.

f. Meter socket and instrument enclosures must conform to the sizes noted in Table 10.1 – Meter Socket and Instrument Enclosures. See Drawing 10.2 – Meter and Test Block Enclosure – Current Transformer Rate Meter Socket for the meter and test block enclosure.

g. The meter socket and instrument transformer enclosure must be connected by a 32mm (1.25 in.) conduit or raceway and shall not include any LBs, if possible. The conduit or raceway must contain only those wires used for the meter installation. The total length of conduit from the metering transformer to the meter cannot exceed 6.5m. The conduit must enter the enclosure as identified in Drawing 10.4 – Instrument Transformer Metering Layout, using approved factory provided knockouts.

h. The instrument transformer enclosure must only contain the metering transformer installation. The conduit entering the enclosure must not interfere with the installation of any conductors, the transformer, or the enclosure cover. The conduits carrying the main service conductors must also enter the enclosure in a way that won't interfere with installing conductors to the metering cabinet.

i. Current transformers must be mounted on the inside back wall of the instrument transformer enclosure and have the polarity marks on the line side, as per Drawing 10.5. Mounting must allow for removing the current transformers without needing to remove the enclosure.

j. Potential transformers should be mounted on the bracket supplied. If none are supplied, they shall be mounted on the back, sides, or bottom of the cabinet and shall be spaced to provide ease of wiring (approximately 100mm).

k. The path for the metering transformer wiring shall be clearly indicated, with adequate provisions for support of the wiring provided. A removable non-conductive wiring support bar placed in front of the metering transformers with adequate clearance is preferable.

l. Rigid bus and suitable insulators must be used on all services over 600A. The bus must be continuous from the main switch to the current transformers and from the transformers to sub-switching or splitter bars.

m. Service conductors can be used on services 600A or less; however, a short piece of rigid bus and suitable insulators are to be connected on either side of the current transformers, per Drawing 10.3 – Three Phase Instrument Transformers for Installations Over 200A – Enclosure Layout Diagram – for examples see Image 10.3 – Examples of 3-Phase Metering Transformer Installations. The service conductor shall not exceed 500MCM AL or 350MCM CU in size. This requires a custom metering transformer enclosure. A drawing of the enclosure must be submitted to EDTI prior to construction approval – the drawing shall be authenticated by a Professional Engineer registered in the Province of Alberta, or be accompanied by proof of CSA certification.

n. All metering transformer enclosures shall bare a valid certification mark for the enclosure and bus bar kit, with relevant manufacturer name and model number clearly listed.

o. For any service over 600A, the metering transformer compartment shall be part of the manufactured switchgear assembly.

p. All meter sockets and instrument transformer enclosures must be securely mounted plumb, level, and clear of all objects, and conform to Drawings 10.3, 10.4, and 10.5.

10.10 Δ PRIMARY METERING

a. Provisions must be made for three-element metering.

b. Metering transformers are to be installed on the load side of the circuit breakers and must be capable of being isolated electrically from both supply and load. On services with an alternate source, such as an on-site generator or feeder, switches shall be installed to allow isolation of metering equipment.

c. Metering transformers must be mounted so they are readily accessible for testing or changing, with adequate working space provided.

d. Space must be provided in the Customer's main metering cell for revenue metering transformers. Metering current transformers and potential transformers (with fusing) will be supplied by EDTI and, where feasible, will be installed at the factory when the main cubicle is being fabricated. Where this is not possible, EDTI will make the transformers available for installation by the Customer.

e. A grounding bus must be provided adjacent to the metering transformers. Transformer cases are to be bonded to ground.

f. All metering transformers must be mounted in such a way as to allow for easy access for wiring and a visual inspection of all connections, grounding and wiring.

g. There must be no terminal blocks wired into the secondary of EDTI's metering transformers.

h. All secondary wiring from meter base to EPCOR's metering transformers will be completed by EPCOR.

i. The high-potential conductors of revenue potential transformers must be connected on the EDTI side of the revenue current transformers.

j. EDTI shall have the right to read, inspect, remove, and test metering – pursuant to EDTI Terms & Conditions. Upon EDTI request, a key for the electrical room shall be provided to EDTI.

k. When the meter socket is contained within a metallic enclosure, a 200mm x 200mm window shall be provided directly in front of the meter for viewing of the meter, and to allow communications.

l. The meter socket in Drawing 10.2 – Meter and Test Block Enclosure – Current Transformer Rate Meter Socket must be used. The socket must be Thomas & Betts Cat. # CT113-SWL, or an approved equivalent with a 10-pole test switch and 13-jaw meter socket. The test switch must be pre-wired. The socket must be CSA-approved.

m. The meter socket and instrument enclosures must conform to the sizes noted in Table 10.1 – Meter Socket and Instrument Enclosures. See Drawing 10.2 – Meter and Test Block Enclosure – Current Transformer Rate Meter Socket for the meter and test block enclosure.

n. The meter socket and instrument transformer enclosure must be connected by a 32mm (1.25 in.) conduit or raceway and should not include any LBs, if possible. The conduit or raceway must contain only those wires used for the meter installation.

o. The length of conduit should be such that the total length of metering wiring from instrument transformers to the meter socket should not exceed 6.5m. The conduit must enter the meter enclosure as identified in Drawing 10.4 – Instrument Transformer Metering Layout, using approved factory provided knockouts.

p. All meter sockets must be securely mounted plumb, level, and clear of all objects, and conform to Drawings 10.5 – Instrument Transformer Wiring Diagram.

q. A 14mm (0.5 in.) conduit wired with telephone conductor (i.e. Cat 5) must be provided from a marked factory provided knockout in the 13-jaw meter socket to the main telephone panel or suitable communication (e.g. VOIP) demarcation point.

r. In cubicles containing switches or air circuit breakers, the meter socket must be mounted remote from the switchboard.

s. On outdoor freestanding installations, the meter socket must be mounted on supports remote from the switchgear.

IMAGE 10.1

Δ ACCEPTABLE COMBINATION MAIN BREAKER AND METER SOCKET

Thomas & Betts CO1

Note: For underground installations, the conductor must enter at the bottom right and run through the gutter into the meter socket.

IMAGE 10.2

Δ EXAMPLES OF RESIDENTIAL LINE SIDE METER TERMINATION

IMAGE 10.3

Δ EXAMPLES OF 3-PHASE METERING TRANSFORMER INSTALLATIONS

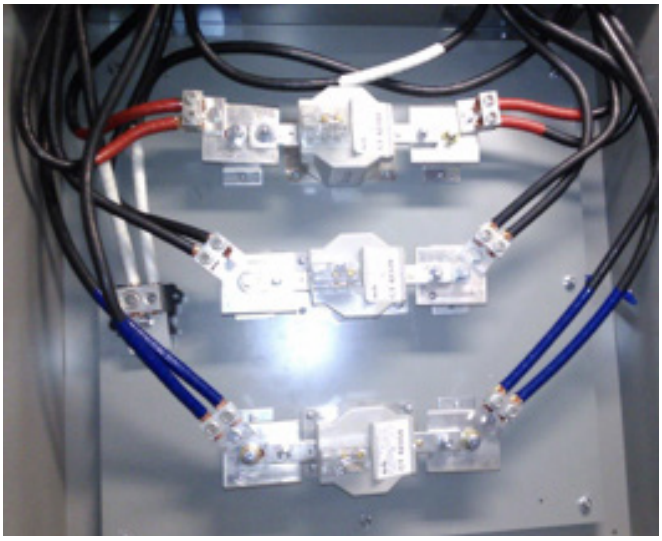

TABLE 10.1

Δ METER SOCKET AND INSTRUMENT ENCLOSURES

SERVICE SWITCH OR BREAKER	METER CABINET	SIZE OF CURRENT TRANSFORMER ENCLOSURE	METERING LEAD CONDUIT
Up to 200A	Socket	N/A	35mm (1.25 in.) Diameter. Maximum 6.5m in length.
201 to 399A With current transformers only	Current and potential transformer rated meter socket. See Drawing 10.2 – Meter and Test Block Enclosure – Current Transformer Rate Meter Socket for details.	900 x 900 x 250mm	
201 to 399A With current and potential transformers			
400 to 600A		1066 x 1066 x 250mm	
Over 600A		Per EDTI Meter Operations – See Note	

- All enclosure sizes are for 600V services or less.
- All dimensions listed are inside dimensions.
- EDTI Metering shall provide review and direction for over 600A sub-service. Contact us for details.

DRAWING 10.1

MULTI-METER INSTALLATION

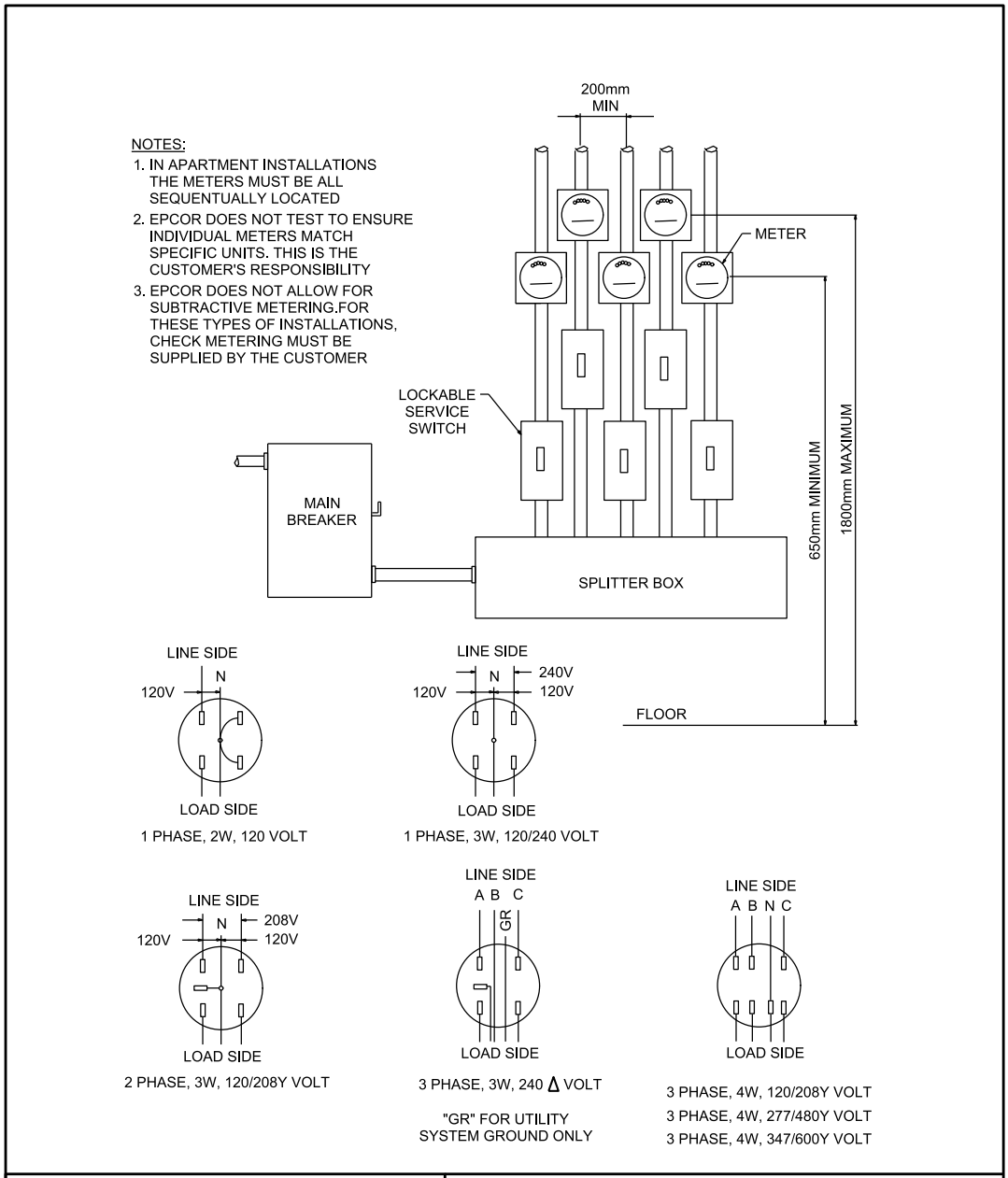

DRAWING 10.2

METER AND TEST BLOCK ENCLOSURE – CURRENT TRANSFORMER RATE METER SOCKET

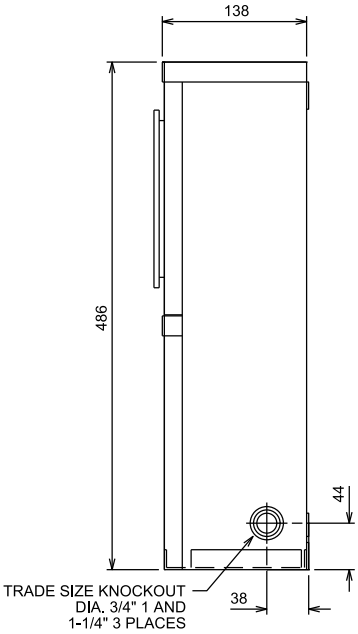

METER ENCLOSURE - 200 A OR LESS

SCALE: N.T.S.

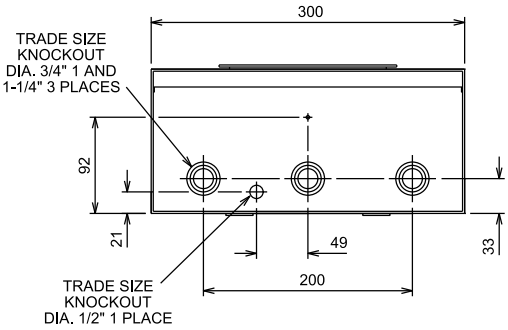

NOTE:

1. THOMAS & BETTS CT113-SWL WEATHERPROOF TYPE 3R ENCLOSURE OR CSA EQUIVALENT APPROVED BY EDTI (REQUIRED IN ALL CASES)

ALL DIMENSIONS IN MILLIMETERS (INCHES) UNLESS OTHERWISE SPECIFIED.

EPCOR CUSTOMER CONNECTION GUIDE		METER AND TEST BLOCK ENCLOSURE CURRENT TRANSFORMER RATED METER SOCKET	
DATE REVISED: 2016-12-02	DRAWING NO.: 020	REFERENCE NO. 66 CC 07 02 90 101	PAGE NO. 1/1

DRAWING 10.3

THREE PHASE INSTRUMENT TRANSFORMERS FOR INSTALLATIONS OVER 200A – ENCLOSURE LAYOUT DIAGRAM

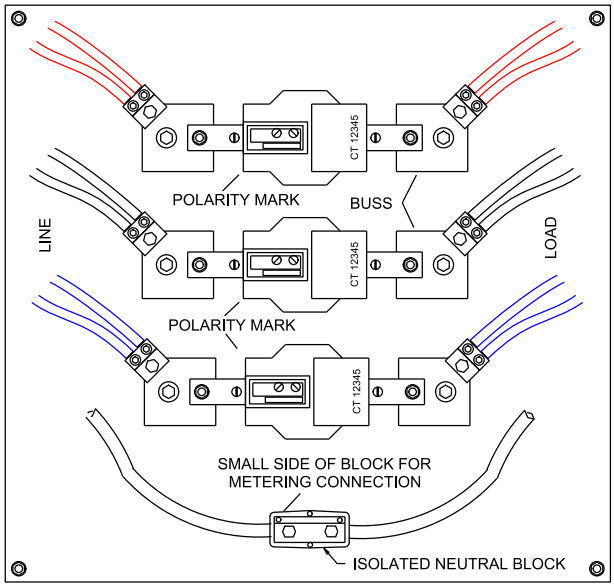

NOTES:
1. FOR SERVICES > 600A BUSS BAR REQUIRED
2. FOR SERVICES ≤ 600A CABLE CONNECTION ALLOWED

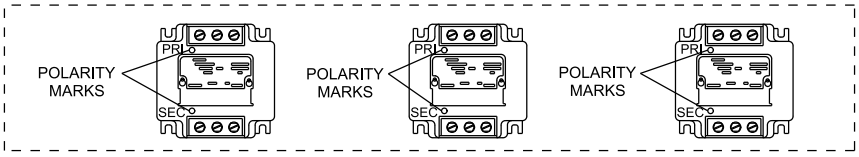

NOTES:
1. CT'S & PT'S IF REQUIRED WILL BE SUPPLIED BY EPCOR
2. THE NEUTRAL CONDUCTOR MUST BE RUN INTO THE INSTRUMENT TRANSFORMER ENCLOSURE. THE CUSTOMER MUST INSTALL AN ISOLATED NEUTRAL BLOCK TO THE ENCLOSURE
3. THE POLARITY MARK INDICATES THE LINE SIDE OF THE TRANSFORMER
4. THE ISOLATED NEUTRAL BLOCK MUST BE INSULATED FROM THE ENCLOSURE
5. WHERE PARALLEL CONDUCTORS ARE USED FOR GREATER AMPACITY ONLY ONE NEUTRAL CONDUCTOR NEEDS TO BE CONNECTED TO THE ISOLATED NEUTRAL BLOCK
6. IF A NEUTRAL CONDUCTOR IS NOT REQUIRED BEYOND THE ISOLATED NEUTRAL BLOCK IN THE INSTRUMENT ENCLOSURE, THEN THE NEUTRAL CONDUCTOR (WHITE) FROM THE MAIN SERVICE DISCONNECT TO THE INSTRUMENT TRANSFORMER ENCLOSURE NEED ONLY BE SIZED ACCORDING TO TABLE 16 OF THE CANADIAN ELECTRICAL CODE PART ONE (CEC 10-204)
7. THE NEUTRAL CONDUCTOR FROM THE MAIN SERVICE DISCONNECT NEUTRAL TERMINAL BLOCK TO THE INSTRUMENT TRANSFORMER MUST BE INSULATED
8. POTENTIAL TRANSFORMERS MUST HAVE SUFFICIENT SPACING TO ALLOW FOR METER WIRING (10cm) AND MUST BE MOUNTED ON THE BACK, SIDES OR BOTTOM INSIDE CABINET

EPCOR CUSTOMER CONNECTION GUIDE	THREE PHASE INSTRUMENT TRANSFORMERS FOR INSTALLATIONS OVER 200 AMP ENCLOSURE LAYOUT DIAGRAM		
DATE REVISED: 2017-01-24	DRAWING NO.: 021	REFERENCE NO. 65 CC 07 00 25 100	PAGE NO. 1/1

DRAWING 10.4

INSTRUMENT TRANSFORMER METERING LAYOUT

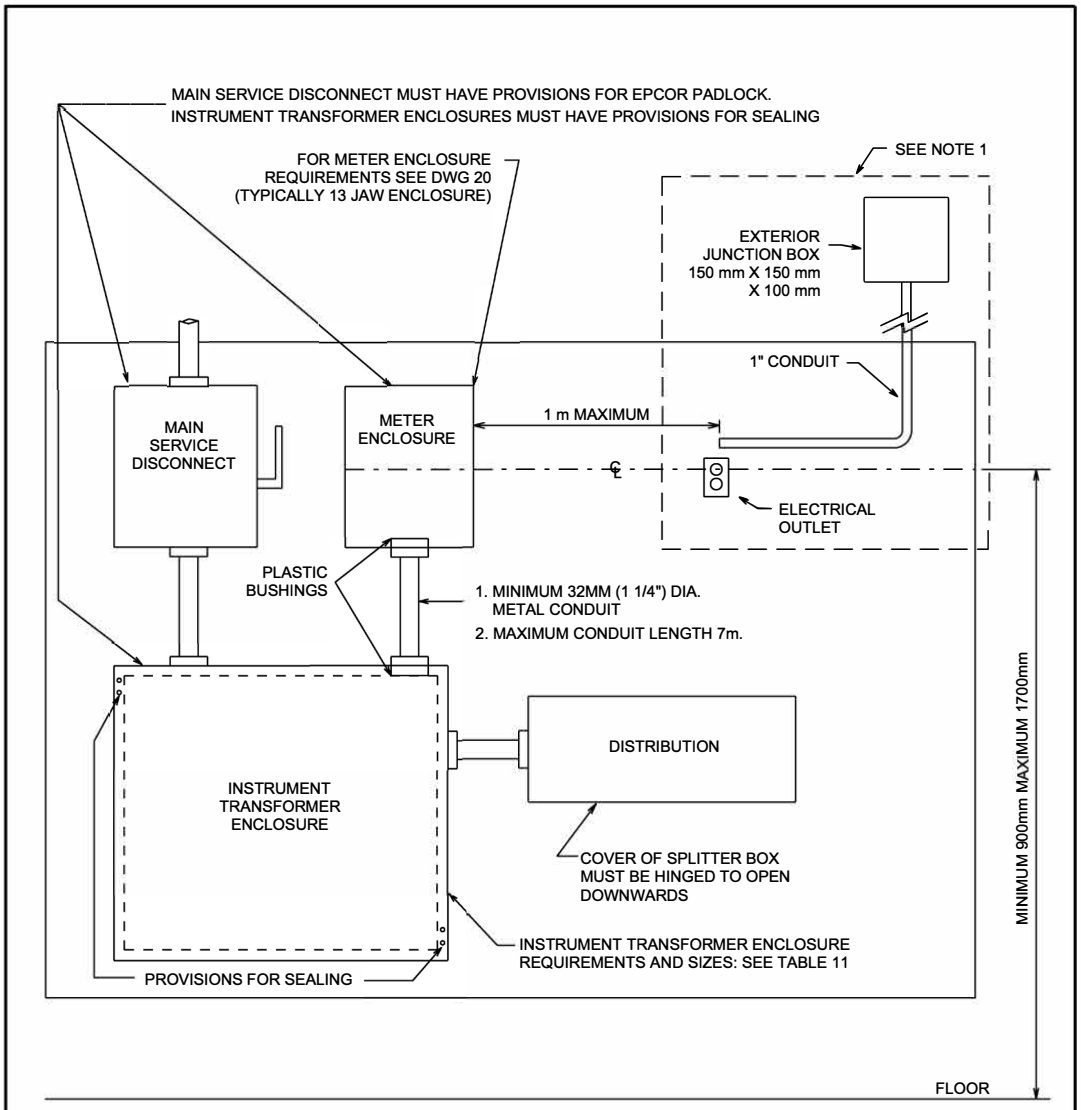

NOTES:

1. FOR METERS INSTALLED BELOW GRADE, A 1" CONDUIT SHALL BE INTALLED TO AN EXTERIOR JUNCTION BOX. IN ADDITION ONE 120 V 15 A DUPLEX RECEPTACLE MUST BE PROVIDED.

EPCOR CUSTOMER CONNECTION GUIDE	INSTRUMENT TRANSFORMER METERING LAYOUT		
DATE REVISED: 2016-12-06	DRAWING NO.: 022	REFERENCE NO. 65 CC 07 00 90 100	PAGE NO. 1/1

DRAWING 10.5

INSTRUMENT TRANSFORMER WIRING DIAGRAM

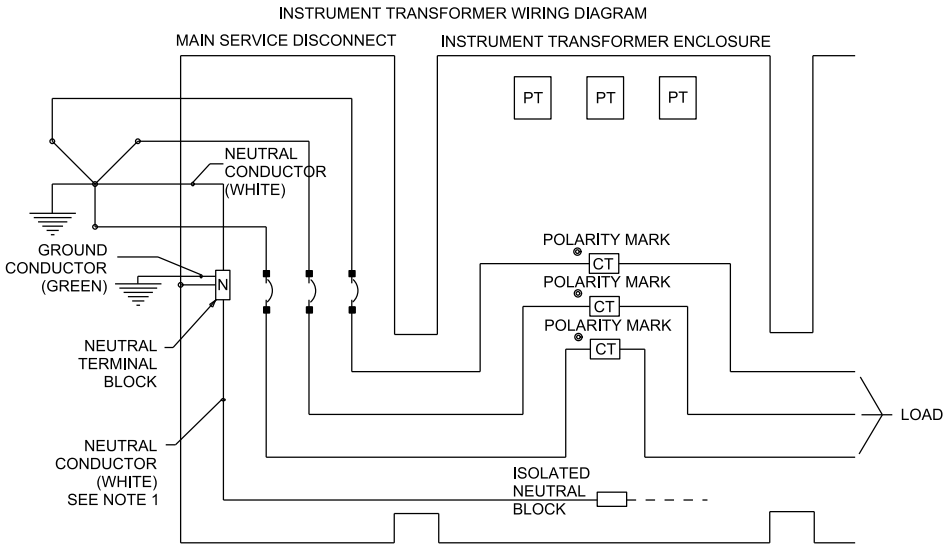

NOTE:

1. THE NEUTRAL CONDUCTOR OR BUSS MUST BE BROUGHT INTO THE INSTRUMENT TRANSFORMER ENCLOSURE TO AN ISOLATED NEUTRAL BLOCK WITH CONNECTION POINT FOR METER WIRING (#10 AWG)

EPCOR CUSTOMER CONNECTION GUIDE	INSTRUMENT TRANSFORMER WIRING DIAGRAM		
DATE REVISED: 2016-11-25	DRAWING NO.: 023	REFERENCE NO. 65 CC 07 00 25 001	PAGE NO. 1/1

11.0

Generation & Batteries

11.1 Δ GENERAL INFORMATION

a. Albertans are allowed, under specific provincial regulations, to generate their own environmentally friendly electricity and receive credit for any unused power that is exported onto the distribution grid.

b. The regulatory framework currently allowing for Customer generation include: Micro-Generation, Small Scale Generation (including Community Generation), or Municipal Own-Use Generation. Customers may also select to apply to connect their generation site as a standard distributed generator. Each regulatory regime has different benefits and restrictions.

	MICRO-GENERATION	SMALL SCALE GENERATION	COMMUNITY GENERATION	DISTRIBUTED GENERATION
GENERATOR SIZE	<5MW	Based on Hosting Capacity		
CUSTOMER TYPE	All Customers		"Community Group" per regulation definition.	All Customers
GENERATION SOURCE	Renewable or alternative			All fuel types
PRIMARY ENERGY USE	Offset consumption	Offset consumption and/or export for sale to market		Export for sale to market
METERING COSTS	by EDTI	by Customer	by EDTI	by Customer

c. A quick description of each is below, however Customers are encouraged to engage a knowledgeable consultant to determine which approach is best for their situation.

i. Micro-Generation

This regulation allows Customers to install renewable or alternative energy generation on their site. To qualify under this regulation the generator must meet the following criteria:

a. Have a total nameplate capacity that does not exceed the lesser of 5MW or rating of the Customer's service.

b. Exclusively uses sources of renewable or alternative energy; having the EcoLogo certification, or is of a generation source that has greenhouse gas intensity less than 418 kg per MWh.

c. Supplies electric energy only to a site that is located on property the Customer owns or leases.

d. Is intended to meet all or a portion of the Customer's total annual energy consumption at the Customer's site or aggregated sites.

e. When sites are aggregated they shall be:

   i. Located on the property above or on a property that the Customer owns or leases, that is adjacent to the property above.

   ii. Connected to the same single electric distribution system feeder as the property above.

   iii. Enrolled with the same retailer or regulated rate provider.

Governed by Micro-Generation Regulation, AUC Rule 024: Rules Respecting Micro-Generation, and other applicable legislation, codes, standards, and guidelines. It is the responsibility of the applicant to know and meet all the requirements of the most recent versions of each document.

ii. Small Scale Generation (including Community Generation)

This regulation enables eligible generating units using sources of renewable or alternative energy to be qualified as small-scale generation, and if social, environmental or economic benefits are conferred to a community group, to be qualified as community generation. To qualify under this regulation the generator must meet the following criteria:

a. Have a total nameplate capacity that does not exceed the distribution system hosting capacity at the point of interconnection.

b. Exclusively uses sources of renewable or alternative energy; having the EcoLogo certification, or is of a generation source that has greenhouse gas intensity less than 418 kg per MWh.

Governed by Small Scale Generation Regulation, AUC Requirements, and other applicable legislation, codes, standards, and guidelines. It is the responsibility of the applicant to know and meet all the requirements of the most recent versions of each document.

iii. Municipal Own-Use Generation

This regulation is governed under the Electric Utilities Act and establishes the circumstances, in addition to those permitted under Section 95 of that Act, in which a municipality or a subsidiary of a municipality may hold an interest in a generating unit. It also establishes the requirement for a compliance plan prior to exchanging energy with the interconnected electric system.

Governed by Municipal Own-use Generation Regulation, and other applicable legislation, codes, standards, and guidelines. It is the responsibility of the applicant to know and meet all the requirements of the most recent versions of each document.

iv. Standard Distributed Generation

Where the exemption regulations above do not apply, a Customer may be able to install a generator as allowed for under AUC Rule 007: Applications for Power Plants, Substations, Transmission Lines, Industrial System Designations, Hydro Developments and Gas Utility Pipelines. In addition of the regulation, other applicable legislation, codes, standards, and guidelines may apply. It is the responsibility of the applicant to know and meet all the requirements of the most recent versions of each document.

11.1.1 Δ Backup Generators and Non-Export Batteries

a. Backup generators or batteries that are installed with a transfer switch or interlock that prohibits the use of the generator while connected to the distribution grid so that it may not export (backfeed), do not require EDTIs permission to install.

b. Backup generators or batteries that are installed with only software that prohibits the use of the generator while connected to the distribution grid so that it may not export (backfeed), requires the Customer confirm that suitable metering is in place. See Section 11.6 – Generation Metering before proceeding with installation; otherwise EDTIs permission is not required to install.

c. There may be other requirements by the municipality to install these devices; the Customer should check with the municipality for details.

11.1.2 Δ Exporting Batteries

a. Batteries that are able to export energy to the distribution system are treated the same as generators, except there is no specific regulation permitting their installation.

b. EDTI reviews applications for these battery installations on an individual basis. EDTI will determine if it is feasible, in its sole option, to install and operate a battery at a particular site.

c. All costs to investigate the proposed installation, and to modify the distribution system as EDTI deems necessary, shall be paid by the Customer in full in advance of the work.

d. EDTI shall provide an interconnection study for each installation, as detailed in Section 11.4.1 – Interconnection Studies.

11.2 PROCESS

The process below details the high-level process for the typical generator or battery application to EDTI. It does not include all potential steps with other third-parties, including but not limited to, the Alberta Utilities Commission (AUC), the Customer's energy retailer, Environment Canada, Transport Canada, the municipality, and other federal and provincial agencies.

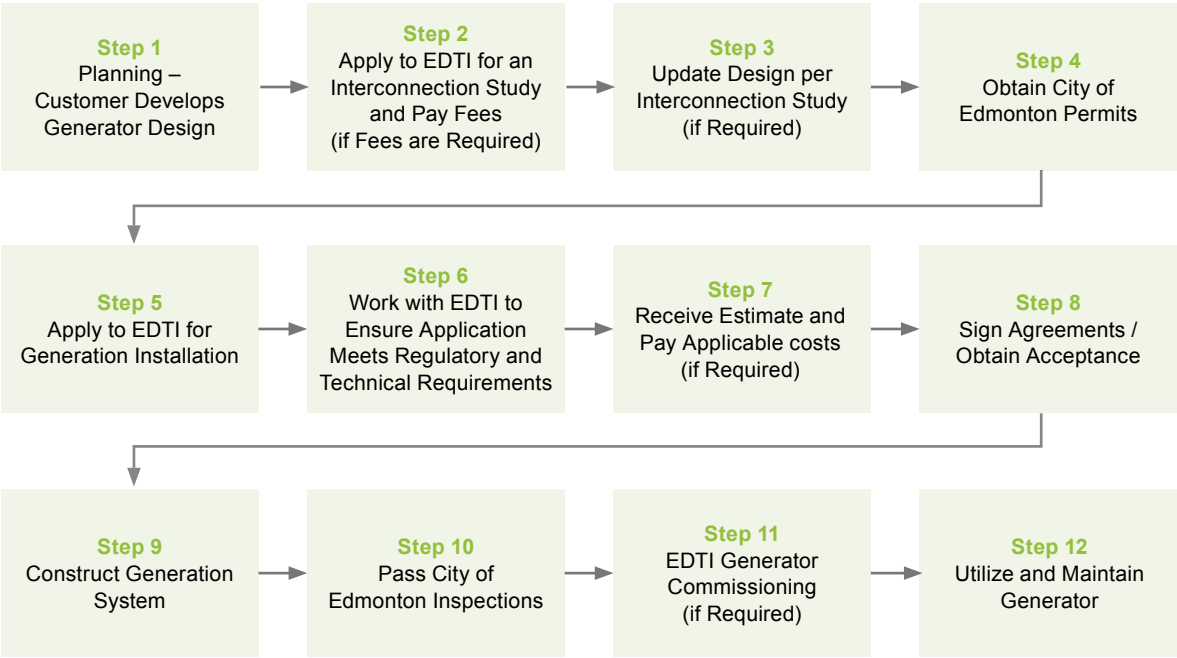

11.3 Δ PLANNING

a. Review the following documents and ensure compliance where applicable:

   i. The respective regulation you are applying under:

      - Micro-Generation Regulation
      - Small Scale Generation Regulation
      - Municipal Own-use Regulation

   ii. The relevant AUC rules:

      - Rule 007: Applications for Power Plants, Substations, Transmission Lines, Industrial System Designations, Hydro Developments and Gas Utility Pipelines
      - Rule 012: Noise Control
      - Rule 024: Rules Respecting Micro-Generation

   iii. City of Edmonton Permitting Requirements

   iv. CSA – C22.1 Canadian Electrical Code

   v. CSA – C22.2 No.107.1 Power Conversion Equipment

   vi. CSA – C22.2 No. 257 Interconnecting Inverter-based Micro-Distributed Resources to Distribution Systems

   vii. CSA – C22.3 No. 9 Interconnection of Distributed Resources and Electricity Supply Systems

   viii. IEEE 1547 – Standard for Interconnection and Interoperability of Distributed Energy Resources with Associated Electric Power Systems Interfaces

   ix. UL1741SA – Inverters, Converters, Controllers and Interconnection System Equipment for Use With Distributed Energy Resources (Note: UL1741SB compliance will be required after December 31, 2022)

b. Before starting the design, if you are designing a single-family residential micro-generation system that is greater than 19.2kW, contact EDTI's Customer Engineering Services at distgen@epcor.com. There may be special requirements for larger micro-generation applications.

c. You will need to request an Interconnection Study if you meet any of the criteria below:

   i. 50kW or greater single phase

   ii. 150kW or greater 3-phase

   iii. Network Area

   iv. Exporting (backfeeding) battery

   v. Other reasons as determined by EDTI in its sole option.

   See Section 11.4.1 – Interconnection Studies for details on applying for an Interconnection Study.

d. See Table 11.1 – Project Overview for a non-exhaustive list of requirements of note for different sized generators.

11.4 Δ APPLICATION

a. Applications for Interconnection Studies and new generation/battery sites shall include the following information.

   i. Completed Form A – Generation Notice (unsigned if for an Interconnection Study – See Section 11.4.1 Interconnection Study for details).

   ii. Third-Party Authorization and Consent Form (if a contractor/consultant is acting on behalf of the Customer). See Form 1.1 – Third-Party Authorization and Consent Form for a blank copy.

   iii. A copy of the City of Edmonton electrical permit issued. (See Section 11.4.2 – Permits for details.)

   iv. A copy of the building permit issued for site construction (if applicable).

   v. A single line diagram with the information outlined in Section 11.4.3.1 – Single Line Drawing Requirements.

   vi. Site plan, real property report, or satellite aerial image with the information outlined in Section 11.4.3.2 – Site Plan/Real Property Report /Satellite Aerial Image.

   vii. Manufacturer information documents showing a Canadian standard approval identified in Table 11.2 – Canadian Standard Approvals. Alternatively, drawings of the proposed micro-generation system (e.g. solar panels, inverters, etc.) devices to be stamped by the manufacturer's engineer registered in the province of Alberta.

   viii. If combustion fuels are used, then calculations for greenhouse gas intensity must be provided, and shall be sufficient per EDTI to meet the requirements for the regulation applied under.

b. Where installing a synchronous generator, include the following information in a separate PDF document, in the order below:

   i. Machine make and model

   ii. Number of phases [1, 3]

   iii. Rated voltage [kV]

   iv. Rated apparent power [kVA]

   v. Rated power factor [%]

   vi. Minimum reactive power limit [kVAR]

   vii. Maximum reactive power limit [kVAR]

   viii. Connection type of stator winding [D, Y, I]

   ix. Is Y-connected generator grounded? [Yes, No]

   x. Fault Contribution [%]

   xi. Xd – Direct axis unsaturated synchronous reactance [%]

   xii. X'd – Direct axis unsaturated transient reactance [%]

   xiii. X''d – Direct axis unsaturated sub-transient reactance [%]

   xiv. Ta – Aperiodic time constant [sec]

xv. T'd – Transient time constant [sec]

xvi. T''d – Sub-transient time constant [sec]

xvii. X2 – Unsaturated negative sequence reactance [%]

xviii. X0 – Unsaturated zero sequence reactance [%]

c. If any information is missing or invalid, the application shall be considered incomplete and returned to the Customer for correction.

d. Submit the complete application package with all required documentation in PDF format to distgen@epcor.com.

11.4.1 Δ Interconnection Studies

a. To obtain an Interconnection Study, the Customer shall make an application that includes an email detailing they are requesting an Interconnection Agreement. The email shall include a completed copy of Form A without any signatures.

b. EDTI shall provide a quote to the Customer for the cost involved with completing the requested Interconnection Study, if applicable. These costs shall be paid in full prior to the study commencing.

c. The development of an interconnection study does not guarantee the proposed installation will be permissible. In the event that the Customer's proposal cannot be accommodated, no refund of any study costs shall be provided. The Customer may make amendments to their proposal, which EDTI will review at additional cost to the Customer.

d. EDTI may at its sole option provide a letter of acceptance, detailing specific requirements for the installation, in lieu of a full interconnection study report.

e. The Customer shall update their final application to include all requirements set forth in the Interconnection Study. Applications that are not fully updated to comply with the Interconnection Study requirements shall be considered incomplete and returned to the Customer to be corrected before they will be accepted for review.

11.4.1.1 Δ Communication & Control Requirements

a. EDTI requires visibility and controllability of generation/battery units 250kW and over, any units that are on the network, or in otherwise cases as deemed necessary by EDTI.

b. EDTI may require visibility without controllability of generation/battery units as it deemed necessary.

c. EDTI will typically implement communication through either a direct fiber connection or a radio communication system depending on their analysis of the project. Communication must be via 100% utility infrastructure.

d. When communication is by radio, the Customer shall provide the following or alternative, as directed by EDTI:
    i. **Antenna**: PCTEL BOA9025
    ii. **Antenna Mount**: PCTEL BAM1005 Mast Mount
    iii. **Pipe**: 2.0 in. diameter, affixed to structure, in a location selected by EDTI.
    iv. **Radio Cabinet**: Lockable per EDTI Interconnection Guide/Report
    v. **Coax Radio Cable**: Supply sufficient length from antenna to EDTI radio location, with ample length to terminate. EDTI technician to terminate radio end.
    vi. **Bonded Conductor**: #6 AWG. Supply sufficient length to EDTI radio location, with ample length to terminate. EDTI technician to terminate radio end.
    vii. **Power**: 120V 15A AC outlet within 3-feet of radio location.
e. The interconnection report will provide the general communication requirements for your project. EDTI will work with you directly on the specific detailed communication requirements to meet these needs after your successful application.
f. Typical Visibility Requirements:
    i. Active Power (W)
    ii. Reactive Power (VAR)
    iii. Voltage (V)
    iv. Current (A)
    v. Frequency (Hz)
    vi. Operational State – At a minimum on/off status.
    vii. Connection Status (including main breaker 52a & 52b statuses)
    viii. Alarm Status
    ix. Operational State of Change (for Batteries)
g. Controllability Requirements:
    i. Control output to open each breaker
    ii. Control output to close each breaker
h. IEC61850 Enabled.

11.4.2 Permits

All applicable permits from the City of Edmonton must be applied for and obtained prior to submitting the final Form A application. Contact the City of Edmonton (311) for all necessary information on the permits required.

11.4.3 Drawings

Below are the various requirements and details for the drawings that are required as part of your application package. Customers are responsible to review the information below and to meet all the requirements.

11.4.3.1 Single Line Drawing Requirements

a. See Image 11.1 for a sample single line diagram from Customer Engineering.

b. Must be stamped by Professional Engineer if system is greater than 50kW (single phase) or 150kW (three phase).

c. The following are EPCOR's requirements for single line diagrams (SLDs).

   i. Module brand, model, certification mark, quantity, combined DC STC output, and location.

   ii. Service entrance information (line phase, voltage, wire service provider).

   iii. All bonding and grounding conductors, and system grounding electrodes.

   iv. All sub and main panel bus bar ratings and feeder breaker sizes.

   v. DC and AC disconnect locations on site.

   vi. Minimum conductor size and length.

   vii. Inverter brand, model, certification mark, quantity, individual and combined output rating (current, voltage, and ac power), and their locations.

   viii. Combiner box details, with fuse ratings where applicable.

   ix. Solar array DC circuit rating per module for micro-inverters or DC Optimizers, or combined string ratings, at Standard Testing Conditions: Voltage Open Circuit, Max Power Voltage, Max Power Current, Show number of modules per string.

11.4.3.2 Site Plan/Real Property Report/Satellite Aerial Image

a. See Image 11.2 for a sample site plan from Customer Engineering.

b. Show all existing and proposed structures.

c. Provide distances from existing and proposed structures to property lines.

d. Provide the proposed micro-generation system dimensions (e.g. solar panels) in relation to any existing and proposed structures.

e. Show the location of the meter socket.

11.5 Δ REVIEW OF APPLICATION

a. EPCOR will review your application to ensure it complies with EDTI standards, regulations, AUC Guidelines, and other requirements.

b. If any information is missing or invalid, the application shall be considered incomplete and returned to the Customer for correction.

c. If the application has apparent errors that would prevent it being accepted under the requested regulatory regime, the application shall be considered incomplete and returned to the Customer for correction. If the Customer requests to proceed without correction, EDTI will be required to reject the application or dispute it per the requirements of the regulatory regime.

d. Following the successful review of your application, either:

   i. an email confirming you may proceed with installation as applied for will be provided by EDTI, or;

   ii. an Interconnection Agreement will be sent to you by EDTI for your review and signature. Upon signing and returning the Interconnection Agreement you may proceed with installation as applied for.

11.6 Δ GENERATION METERING

a. An EPCOR installed Measurement Canada approved bi-directional meter suitable for net billing is required for all generation/battery sites.

b. Sites where the generator or battery system is prohibited from exporting by software controls only are required to have an EDTI installed Measurement Canada approved bi-directional meter for safety and reliability purposes. Contact us before installing such a generator or battery system to ensure you comply with this requirement.

11.7 INSPECTION

a. Your micro-generation system must pass an electrical inspection before connecting it to the EPCOR distribution system. Contact the City of Edmonton (311) to make these arrangements.

b. Upon passing inspection, forward a copy of the passed electrical inspection report via email in PDF format to distgen@epcor.com.

11.8. Δ COMMISSIONING

a. Any commissioning activities identified by EDTI in the Interconnection Study or otherwise shall be completed to EDTI's satisfaction before energizing the generator/battery.

b. EDTI shall provide written confirmation to the Customer once the commissioning activities are complete.

TABLE 11.1

PROJECT OVERVIEW

GENERATION SIZE	SPECIAL REQUIREMENTS OF NOTE
Less than 50kW	• None
50kW to less than 250kW	• Request Interconnection Study from EDTI before applying to City of Edmonton for permit.
250kW to less than 1MW	• Request Interconnection Study from EDTI before applying to City of Edmonton for permit. • Requires visibility and controllability via SCADA communications.
1MW and greater	• Request Interconnection Study from EDTI before applying to City of Edmonton for permit. • Requires visibility and controllability via SCADA communications. • Transfer switch required.
Network Area (See Drawing 3.2 – EPCOR Primary Voltage Service Areas – Downtown Network (Detailed) for area.)	• Request Interconnection Study from EDTI before applying to City of Edmonton for permit. • Requires visibility and controllability via SCADA communications.

TABLE 11.2

CANADIAN STANDARD APPROVALS

CERTIFICATION BODY	CERTIFICATION MARKS	MARK DESCRIPTION
CSA INTERNATIONAL	C US NRTL/C	The CSA certification mark alone without any identifier indicates products approved to Canadian national standards. If another country's identifier is present (i.e., US, NRTL), then the small 'C' Canadian identifier is required to indicate that the product also complies with Canadian national standards.
CURTIS-STRAUS LLC	C	The Curtis-Straus LLC certification mark requires the small 'C' Canadian identifier at the 8 o'clock position to indicate compliance to Canadian national standards.
ETL INTERTEK ENTELA	C entela Certified	The ETL Intertek Entela certification mark requires the small 'C' Canadian identifier at the 8 o'clock position to indicate compliance to Canadian national standards. Identifiers for other countries may be present but in all cases, the small 'C' is required.
ETL INTERTEK SEMKO	C LISTED US C INTERTEK Warnock Hersey Warnock Hersey C US	ETL Intertek Semko has two certification marks, the ETL mark and the WH mark. Each mark requires the small 'C' Canadian identifier to indicate compliance to Canadian national standards. Identifiers for other countries may be present but in all cases, the small 'C' is required.
FM APPROVALS	C FM APPROVED	The FM certification mark requires the small 'C' Canadian identifier to indicate compliance to Canadian national standards. Identifiers for other countries may be present but in all cases, the small 'C' is required.
LABTEST CERTIFICATION INC.	C LC US	The Labtest Certification Inc. certification mark requires the small 'C' Canadian identifier to indicate compliance to Canadian national standards. Identifiers for other countries may be present but in all cases, the small 'C' is required.

TABLE 11.2 - CONTINUED

CANADIAN STANDARD APPROVALS

CERTIFICATION BODY	CERTIFICATION MARKS	MARK DESCRIPTION
MET LABORATORIES		The MET certification mark requires the small 'C' Canadian identifier to indicate compliance to Canadian national standards. Identifiers for other countries may be present but in all cases, the small 'C' is required.
NEMKO CANADA INC.		The Nemko certification mark requires the small 'C' Canadian identifier at the 8 o'clock position to indicate compliance to Canadian national standards.
NSF INTERNATIONAL		The NSF International certification mark requires the small 'C' Canadian identifier to indicate compliance to Canadian national standards. Identifiers for other countries may be present but in all cases, the small 'C' is required.
OMNI-TEST LABORATORIES INC.		The OMNI-Test Laboratories Inc. certification mark requires the small 'C' Canadian identifier to indicate compliance to Canadian national standards. Identifiers for other countries may be present but in all cases, the small 'C' is required.
QUALITY AUDITING INSTITUTE		The QAI certification mark requires the small 'C' Canadian identifier to indicate compliance to Canadian national standards. Identifiers for other countries may be present but in all cases, the small 'C' is required.
QPS EVALUATION SERVICES INC.		The QPS certification mark requires the small 'C' Canadian identifier to indicate compliance to Canadian national standards. Identifiers for other countries may be present but in all cases, the small 'C' is required.

TABLE 11.2 - CONTINUED

CANADIAN STANDARD APPROVALS

CERTIFICATION BODY	CERTIFICATION MARKS	MARK DESCRIPTION
TÜV RHEINLAND OF NORTH AMERICA	TÜV Rheinland of North America, Inc. C US	The TÜV Rheinland certification mark requires the small 'C' Canadian identifier to indicate compliance to Canadian national standards. Identifiers for other countries may be present but in all cases, the small 'C' is required.
TÜV PRODUCT SERVICE	Safety tested Production monitored TÜV PRODUCT SERVICE NRTL C US	The TÜV Product Service certification mark requires the small 'C' Canadian identifier to indicate compliance to Canadian national standards. Identifiers for other countries may be present but in all cases, the small 'C' is required.
UNDERWRITERS' LABORATORIES	ULC c UL US	The ULC certification mark is a Canada-only mark indicating compliance to Canadian national standards. It does not require a small 'C' Canadian identifier.

IMAGE 11.1

SINGLE LINE DIAGRAM EXAMPLE

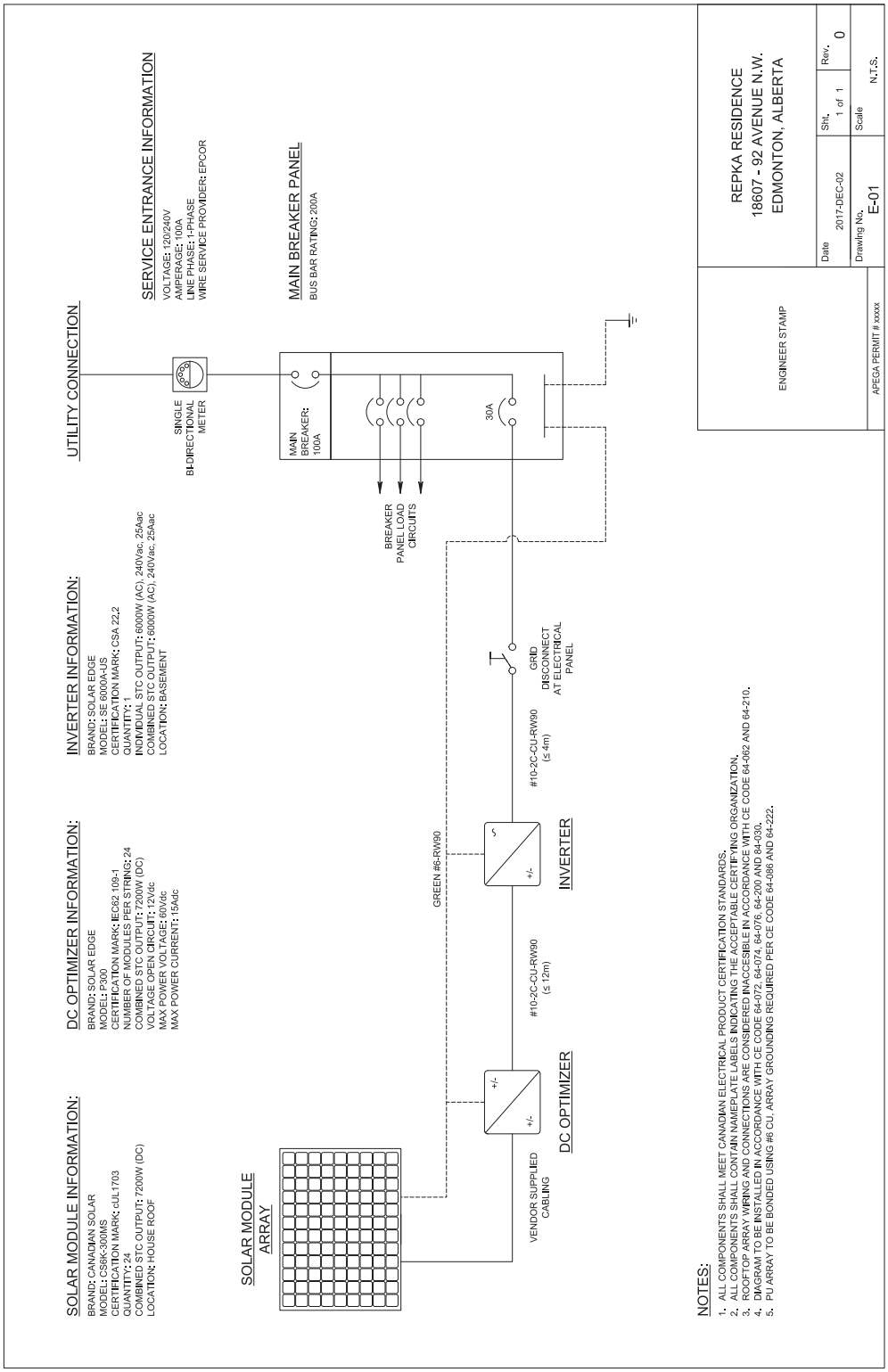

IMAGE 11.2

SITE PLAN EXAMPLE

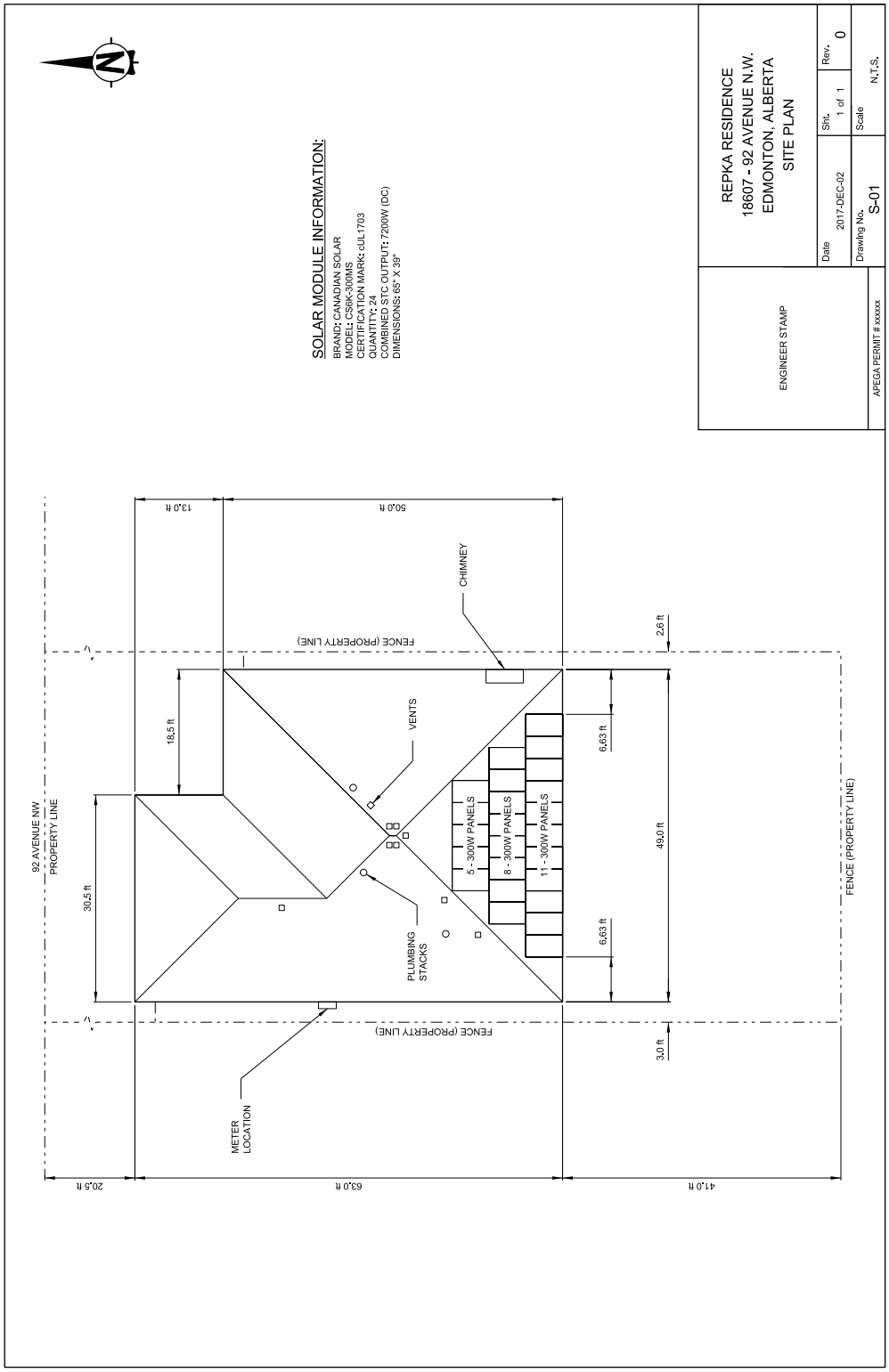

12.0

Additional Information

12.1 Δ CHECKLISTS

EDTI provides the following checklists to assist Customers:

- Checklist 12.1 – New Power Connection Site Ready Checklist
- Checklist 12.2 – Single Phase Transformer Inspection Stages Checklist
- Checklist 12.3 – Three Phase Transformer Inspection Stages Checklist

12.2 OPERATIONS

a. The Customer must supply a 24-hour contact number for a Customer representative qualified to operate the Customer circuit breakers. EDTI's personnel will not operate Customer circuit breakers or main disconnects.

b. The Customer must also notify EDTI when harmonic loads are added to an existing utility transformer.

c. The Customer will make any required repairs (other than temporary emergency repairs to restore service that may be made by EDTI) to equipment they own.

d. EDTI has the right to require the Customer to install additional equipment that will reduce or correct flicker resulting from high-surge equipment connected to the service connection. If this is the case, we will notify the Customer.

e. The electrical service may be subject to voltage fluctuations and other similar issues. Customers should consider installing voltage regulation and surge protection equipment.

12.3 TREE TRIMMING

Tree limbs that fall into power lines cause many power outages and are a potential danger for you and your property. Routine tree trimming and avoiding planting trees under or near power lines can help prevent this. For complete information on what needs to be done and who's responsible for the work, visit Request a Tree Trimming page on epcor.com.

12.4 HYDRO-EXCAVATION PROCEDURE (HYDROVAC) OVER PRIMARY AND SECONDARY CABLES ON PRIVATE PROPERTY

a. Always follow updated EDTI hydro excavating standards (i.e. water temperature, water pressure limits, and neoprene oscillating head). The hydro excavating (hydrovac) operator must be familiar with this specific standard before starting work to avoid damage to the cable or exposure to an electrical hazard. A copy of the updated standard must be on-site and made available to EDTI upon request. Contact us for the most recent standard.

b. EDTI will allow a contractor to over trench up to 5.0m from energized facilities by hand or hydro excavating (hydrovac). Contact us before starting work.

c. Exposed energized cables cannot be left unattended. If the excavation is narrow or small, the primary cable must be covered with soil bags or secured with another suitable temporary method. Contact us for more details.

d. Under no circumstances can energized primary cables be moved or handled in any way, unless under the direct supervision of an EDTI Underground Tradesperson.

12.5 Δ TEMPORARY CONNECTIONS

a. Temporary services are electrical services required by the Customer for 12 months or less. Where a service is required for over 12 months, a permanent service shall be required.

b. Examples of temporary services are those for Christmas tree lots and electrical service requirements during construction. Contact us to see if your service requirements can be met with a temporary service.

c. The Customer requesting the temporary service connection will be required to pay EDTI for the cost of any facilities required for the connection, along with the cost of their installation and removal, less the value of salvaged material. EDTI will provide an estimate for these services, and all costs must be paid in advance.

d. EDTI will provide a temporary connection for emergency purposes, at EDTI's sole option, for a period of up to 30 days. The Customer will be notified to complete the repairs within that period. At the end of the 30-day period, the temporary connection will be removed. If the end of the 30-day period occurs between November 15 and April 15, EDTI may not remove the temporary connection until after April 15 due to winter weather conditions.

e. When small, intermittent electrical loads for construction power are needed, an existing underground residential service stub, intended for permanent service, may be permitted for temporary power. Contact us to determine availability and the location of the service stub.

   When an existing underground residential service stub is used for a temporary service:

   i. The Customer must contact us for the location of the residential service stub.

   ii. The Customer is responsible for any additional cable, splicing, trenching, and temporary posts for service.

   iii. The maximum continuous load shall not exceed 7.2kW (30A@240V).

   iv. The service shall not be used for electric heating.

   v. Should an outage occur on a service connection for a URD site where electricity is being used for construction purposes and EDTI determines, at its sole option, that the outage was caused by a maximum continuous load of greater than 7.2kW at the URD site, then the Customer responsible for the site will be required to pay the URD site construction overload outage response fee set out in the Fee Schedule. After which:

      a. EDTI will only fully re-energize the service connection if the Customer confirms to our satisfaction that the consumption at the site will be reduced to a maximum continuous consumption of 7.2kW.

      b. If the Customer fails to do so, or if we are unable to contact the Customer through reasonable efforts, we will only reconnect and re-energize the service connection at 120V.

c. If additional outages occur at a URD site where electricity is being used for construction purposes and EDTI determines, at its sole option, that the outages were caused by a maximum continuous load of greater than 7.2kW, EDTI will disconnect the service to protect the safety and reliability of the distribution system.

vi. When continuous electricity consumption (such as electric heater loads used during construction) of greater than 7.2kW will be required at, the Customer must notify EDTI and apply for the installation of a temporary service connection that's capable of handling the higher load.

f. Special permission before construction approval is required from us for using armored or metal-sheathed (TECK) cable for temporary installations. TECK cable is not allowed for permanent installations. The Customer must supply all associated fittings, including connectors and grounding bushings.

g. The service interrupting capacity of temporary service equipment must match the available fault current of the transformer size and type used, as per Table 3.3 – Main Switch or Breaker Minimum Interrupting Capacity or Table 8.1 – Main Switch or Breaker Minimum Interrupting Capacity – Downtown Secondary Network Services.

h. In aerial distribution areas, aerial temporary services must be mounted on a wood utility pole or wood post. The pole or post shall be:

i. Installed on the Customer's property.

ii. Mounted as close as practical to the EDTI distribution pole, but no closer than the minimum design clearances specified in the Alberta Electrical Utility Code.

Where a wood post is used, it shall be:

iii. A single new pressure treated post.

iv. Measure no less than 102mm × 152mm (4 in. × 6 in.), and be 4.88m (16 ft.) long.

v. Be set in concrete, fillcrete, or post foam 1.22m (4 ft.) deep in a 305mm (12 in.) diameter hole.

vi. Secure a 1.2m long, 38mm x 140mm (2 in. x 6 in. nominal) pressure treated cross arm, 600mm below the conductor attachment point on the wood pole. Secure to pole using a minimum of 2-½ in. Diameter, 4 in. Long, Galvanized Lag Bolts with matching washers – installed 38mm from the edge of cross arm and post – installed top and bottom staggered on cross arm. Predrill for fastener per manufacturer's recommendations.

vii. Exhibit no movement when pushed or pulled by EDTI crews.

i. EDTI will not connect any temporary service to the City of Edmonton's streetlight system.

12.6 RELOCATION OF EDTI EQUIPMENT

a. Requests to relocate EDTI's electrical facilities (poles, transformers, switching cubicles, and pedestals) shall be made to EDTI. Contact us for details.

b. In most cases, the Customer is responsible for all costs associated with relocation of electrical facilities. On request, EDTI will provide an estimate of the costs the Customer will be required to pay.

c. The Customer will be required to pay the estimated cost of relocation in advance.

d. The Customer must also make arrangements for the relocation of all other utilities that may jointly use electrical facilities, such as neighboring properties, telecommunication services, City services, and others before relocation.

e. The Customer may be required, at EDTI's option, to provide a new location and easement on their property to relocate the EDTI equipment to.

12.7 Δ DEMOLITIONS

a. Before the demolition of any building can begin, it's important for electricity and other utilities to be properly disconnected. Electrical services can pose a severe hazard if still active when the demolition takes place.

b. If you plan to demolish a building, you must contact your electrical retailer well in advance of the demolition date. Here are some important points to remember when dealing with different types of projects:

   i. **Residential** – Contact your retailer, request to Remove Meter and Service for Demolition.

   ii. **Small Commercial** – If no EDTI infrastructure, such as padmount transformers, need to be removed, request to Remove Meter and Service for Demolition when you contact your retailer.

   iii. **Commercial/Industrial** – Contact your retailer, request to Remove Meter and Service for Demolition. You must then contact us to arrange for infrastructure removal, which may include padmount transformers, primary cables, aerial transformers, poles, and conductors.

c. Here are some other important things to know before any demolition:

   i. EDTI will not remove the meter until EDTI receives confirmation the site has been de-energized.

   ii. Once we receive notification, EDTI will check voltages and remove all current and potential transformers from the site, along with the meter.

   iii. The Customer must not begin demolition until we have provided written confirmation of de-energization (a guarantee of isolation) and all EDTI assets have been removed.

d. Where EDTI equipment is located on a Customer's property:

   i. The Customer is responsible for all costs associated with relocation of electrical facilities. On request, EDTI will provide an estimate of the costs the Customer will be required to pay.

   ii. The Customer will be required to pay the estimated cost of removal in advance.

   iii. The Customer must also make arrangements for the relocation of all other utilities that may jointly use electrical facilities, such as neighbouring properties, communication network, City services, and others before relocation.

   iv. The Customer may be required at EDTI's option to provide a new location and easement on their property to relocate the EDTI equipment to.

12.8 SPLICING PRIMARY AND SECONDARY CABLES ON PRIVATE PROPERTY

a. When the Customer installs EDTI approved material on private property, EDTI will provide primary and secondary splicing or cable repair.

b. Primary cable splice pits must be 3.0m long (parallel to the trench), 2.0m wide, and 150mm deeper than the cable trench.

c. For secondary cable repair, the splice pit must measure 1.5m long by 1.2m wide. It must be a minimum of 900mm and a maximum of 1,200mm deep, or as deep as the bottom of the stub-outs, whichever is less.

d. For larger secondary connections, the splice pit may need to be longer.

e. The Customer is responsible for all landscaping, concrete, paving repairs, and backfilling of materials after the electrical inspection has passed.

f. At the Customer's cost, EDTI will perform temporary emergency repairs to restore service on Customer-owned materials and equipment. The Customer is responsible for performing all other repairs.

g. When cables are in duct, buried at a depth greater than 1.0m, or under concrete walks, slabs, or driveways, fault location may not be accurate. EDTI takes no responsibility for inaccurate fault locating due to site conditions.

h. EDTI will not splice or repair facilities when the splice or repair would require items that we do not stock. When cable or equipment failures on the Customer's property are caused by third-party damage, we will charge the Customer the full cost for all repairs, including splicing. It will be the property owner's responsibility to collect from any third party. See Section 12.9 – Cable Faults for more information.

12.9 CABLE FAULTS

In accordance with EDTI's Terms and Conditions, Customers or property owners are responsible for installing and maintaining all electrical service connections located on their property. This responsibility includes all civil work, such as excavation, trenching, backfilling, and landscaping, as well as duct or service conduit repair, and any cabling owned by the Customer.

12.9.1 Δ Service Cable

a. If the service disruption to the Customer's property was likely caused by a failure of the service cable (if the cable route is on both public and private property), EDTI will assess the location of the disruption and provide that information at no cost.

b. If the location of the disruption is determined to be on public lands or in a utility Right-of-Way, EDTI will ensure that repairs are completed as soon as possible at EDTI's cost.

c. If the location of the disruption is on private property, the property owner will be responsible for all civil work, as described above. EDTI will complete all electrical connections and cable repairs (e.g. cable splicing, including short lengths of cable) to EDTI owned cables at no cost to the property owner, provided that the original installation meets EDTI standards.

d. If the faulted cable is in a common trench with high-voltage conductors, EDTI will complete the necessary civil work and charge the Customer for the service.

e. If it's evident that the service disruption was caused by third-party damage (e.g., fence posts, piles, non-standard material, workmanship, etc.), all costs to repair the cable will be the Customer's responsibility.

12.9.2 Δ Secondary Cable

a. If the service disruption to the Customer's property was caused by the failure of an EDTI owned low-voltage cable (secondary cable up to 750V) wholly on private property, the property owner is responsible for locating the disruption and all civil work described above.

b. EDTI will assess the location of the disruption along the EDTI owned cable and provide that information at no cost.

c. EDTI will make the cable safe for the Customer to complete their work at no cost. This applies to Customer-owned cables where there are no other safe means of disconnect by the Customer.

d. EDTI will complete all electrical connections and cable repairs (including short lengths of cable) to EDTI owned cables at no cost to the property owner, provided that the original installation meets EDTI's standards.

e. If the faulted cable is in a common trench with high-voltage conductors, EDTI will complete the necessary civil work and charge the Customer for the service.

f. If it's evident that the service disruption was caused by third-party damage (e.g., fence posts, piles, non-standard material, or workmanship), all costs to repair the cable will be the Customer's responsibility.

12.9.3 Δ Primary Cable

a. If the service disruption to the Customer's property was caused by the failure of an EDTI-owned high-voltage cable (primary cable over 750V) wholly on private property, EDTI will make service repairs for safety reasons and to maintain system reliability.

b. EDTI will assess the location of the disruption along the EDTI-owned cable and provide, excavation, cable repair, and rough backfill to grade. EDTI will complete all electrical connections and cable repairs (including short lengths of cable) at no cost to the Customer.

c. The Customer will be responsible for the costs of locating the disruption and all civil work described above to repair the cable. It is the Customer's responsibility to complete the final restoration at their own cost.

d. Note that final restoration may include, but is not limited to, final compaction of the soil, landscaping, and restoring concrete or other surfaces, such as but not limited to, patio surfaces, driveways, and paving stones.

e. If it's evident that the service disruption was caused by third-party damage (e.g. fence posts, piles, non-standard material, workmanship, etc.), all costs to repair the service cable will be the Customer's responsibility.

12.10 PRIVACY POLICY

See EPCOR's Privacy Policy online at epcor.com/privacy.

CHECKLIST 12.1

NEW POWER CONNECTION SITE READY CHECKLIST

New Power Conneciton Site Ready Checklist

Customer Connections

Here is the list of everything that must be completed before our crews can connect your site to the electricity grid. Please review this list and contact your EPCOR representative if you have any questions or concerns.

- ☐ Power cable is coiled at Service Entry Point (SEP)
- ☐ Transformer or cubicle base is facing the correct direction
- ☐ Transformer or cubicle base is level (within ¼" / 6 mm)
- ☐ Switching cubicle base is built properly
  - ☐ Ducts are in the correct compartments
  - ☐ Correct type of ducts are installed
  - ☐ Site duct is connected to proper conduit (i.e. C or D)
- ☐ Transformer base is built properly
  - ☐ Guardrails are installed
  - ☐ The duct is in the correct location
- ☐ Ground wire is in the base
- ☐ Power cable is pulled to base
  - ☐ Secondary - size/type installed:
  - ☐ Multi-Family Unit primary – size/type/voltage installed
- ☐ Make sure that either:
  - ☐ The stub-out location is marked at property line. Note: you must confirm the location of the stub out with your EPCOR representative by email; **or**
  - ☐ The duct is connected to EPCOR stub-out. You must confirm location of the stub out with your EPCOR representative by email.
- ☐ Backfilled to rough grade is complete – (4-6" / 100-125 mm below expected final grade)
- ☐ Proper elevation is observed for the following (requirements are outlined in EPCOR's Customer Connection Guide):
  - ☐ Depth of conduit
  - ☐ Height of pad
- ☐ Proper access to work locations cleared and available
  - ☐ Site is level/drivable
  - ☐ All construction debris or equipment is cleared away from the electrical infrastructure
- ☐ Trees and other landscaping are trimmed or removed from around electrical equipment
- ☐ If there is an on site generator it must be installed as per the manufacturer's specifications downstream from the main
- ☐ If required, the Splice pit is ready for the EPCOR crew to work
- ☐ Pull string between switching cubicle and transformer (for customer installed cubicle only)
- ☐ Phone line infrastructure completed for Primary Service

CHECKLIST 12.2

SINGLE PHASE TRANSFORMER INSPECTION STAGES CHECKLIST

SINGLE PHASE TRANSFORMER INSPECTION STAGES:

A SEPARATE SITE SERVICES PERMIT IS REQUIRED FOR ALL TRANSFORMER INSTALLATIONS. PHONE NUMBER FOR EPCOR'S INSPECTION REQUEST LINE IS (780)412-3772. REQUEST TO BE CALLED IN BY ELECTRICIAN, HAVE PERMIT NUMBER READY.

STAGE ONE, 1 INSPECTION: PRIMARY AND SECONDARY DUCT INSTALLATION.

1. The **Primary duct** installation**:**

- ☐ **EPCOR** reviewed and accepted site drawings are required at this time, to determine the proper requirements for the installation methods used.
- ☐ The service entry point at the property line shall be clearly marked and identified. **Rule 2.7 ECG**
- ☐ When **EPCOR** conduits have been stubbed to the property line, the customer must first confirm that the conduit exposed is the correct conduit, and then attach their supply conduit to **EPCOR's** conduit. **Rule 2.13 ECG**
- ☐ All Primary sweeps entering the transformer base shall be 36" PVC 90deg bends with a minimum of 3m of PVC conduit attached, exiting the base area. **Rule 2.14 and 65CC070027133 Page 3 ECG**
- ☐ All other sweeps through-out run shall be of the 36" radius bend type.
- ☐ The Primary duct shall be buried to a depth of 1.5m to 1.8m at the transformer location, **65CC070027133 Page 3 ECG**, and 1m to 1.3m through-out the remainder of the run. **Rule 2.12 ECG**
- ☐ Clearances to all other utilities shall comply with **Rule 2.6 ECG.**
- ☐ **The Primary duct shall be installed through-out its entirety and remain open for inspection purposes.**

2. The **Secondary duct** installation:

- ☐ All Secondary sweeps entering the transformer base shall be 36" PVC 90deg bends with a minimum of 3m of PVC conduit attached, exiting the base area. **Rule 2.14 and 65CC070027133 Page 3 ECG**
- ☐ All other sweeps through-out run shall be of the 36" radius bend type.
- ☐ The Secondary duct shall be buried to a depth of 1.5m to 1.8m at the transformer location, **65CC070027133 Page 3 ECG**, and 1m to 1.3m through-out the remainder of the run to accommodate the 36" PVC sweep at the Main Distribution. **Rule 2.12 ECG**
- ☐ Clearances to all other utilities shall comply with **Rule 2.6 ECG.**
- ☐ **The Secondary duct shall be installed through-out its entirety and remain open for inspection purposes.**

*****PLEASE NOTE, IF FOR ANY REASON THE PRIMARY AND SECONDARY DUCTS CANNOT BE COMPLETED THROUGH-OUT THEIR ENTIRETY FOR THE STAGE ONE INSPECTION, PROGRESSIVE INSPECTIONS (FOR AN ADDITIONAL FEE) WILL BE REQUIRED.**

CHECKLIST 12.3

THREE PHASE TRANSFORMER INSPECTION STAGES CHECKLIST

THREE PHASE TRANSFORMER INSPECTION STAGES:

A SEPARATE SITE SERVICES PERMIT IS REQUIRED FOR ALL TRANSFORMER INSTALLATIONS. PHONE NUMBER FOR EPCOR'S INSPECTION REQUEST LINE IS (780)412-3772. REQUEST TO BE CALLED IN BY ELECTRICIAN, HAVE PERMIT NUMBER READY.

STAGE ONE: 1 INSPECTION: PRIMARY AND SECONDARY DUCT INSTALLATION.

1. The **Primary duct** installation**:**

- ☐ **EPCOR** reviewed and accepted site drawings are required at this time, to determine the proper requirements for the installation methods used.
- ☐ The service entry point at the property line shall be clearly marked and identified. **Rule 2.7 ECG**
- ☐ When **EPCOR** conduits have been stubbed to the property line, the customer must first confirm that the conduit exposed is the correct conduit, and then attach their supply conduit to **EPCOR's** conduit. **Rule 2.13 ECG**
- ☐ All Primary sweeps entering the transformer base shall be 36" PVC 90deg bends with a minimum of 3m of PVC conduit attached, exiting the base area. **Rule 2.14 and 65CC070027133 Page 3 ECG**
- ☐ All other sweeps through-out run shall be of the 36" radius bend type.
- ☐ The Primary duct shall be buried to a depth of 1.4m to 1.8m **65CC070027133 Page 3 ECG** at the transformer location, **65CC070027133 Page 3 ECG**, and 1m to 1.3m through-out the remainder of the run. **Rule 2.12 ECG**
- ☐ Clearances to all other utilities shall comply with **Rule 2.6 ECG.**
- ☐ **The Primary duct shall be installed through-out its entirety and remain open for inspection purposes.**

2. The **Secondary duct** installation:

- ☐ All Secondary sweeps entering the transformer base shall be 36" PVC 90deg bends with a minimum of 3m of PVC conduit attached, exiting the base area. **Rule 2.14 and 65CC070027133 Page 3 ECG**
- ☐ All other sweeps through-out run shall be of the 36" radius bend type.
- ☐ The Secondary duct shall be buried to a depth of 1.4m to 1.8m at the transformer location, **65CC070027133 Page 3 ECG**, and 1m to 1.3m through-out the remainder of the run to accommodate the 36" PVC sweep at the Main Distribution. **Rule 2.12 ECG**
- ☐ Clearances to all other utilities shall comply with **Rule 2.6 ECG.**
- ☐ **The Secondary duct shall be installed through-out its entirety and remain open for inspection purposes.**

*****PLEASE NOTE, IF FOR ANY REASON THE PRIMARY AND SECONDARY DUCTS CANNOT BE COMPLETED THROUGH-OUT THEIR ENTIRETY FOR THE STAGE ONE INSPECTION, PROGRESSIVE INSPECTIONS (FOR AN ADDITIONAL FEE) WILL BE REQUIRED.**

APPENDIX I

DISTRIBUTION ASSET OWNERSHIP GUIDE

EPCOR DISTRIBUTION ASSET OWNERSHIP GUIDE

Introduction:
This guide, subject to certain exceptions, is used to reference the ownership of distribution assets for installations, maintenance, repairs and removals within EPCOR Distribution & Transmission Inc. service territory.

Revision: November 23, 2021

EDTI Distribution Asset Ownership Guide

REVISION: November 23, 2021

Disclaimer:

The following table defines under which circumstances EPCOR Distribution & Transmission Inc. ("**EDTI**") owns a particular asset on public or private property within EDTI's service territory. In this guide, where no distinction is made between an asset on public and/or private property, the definition shall apply to both public and private properties. This guide is limited to distribution assets and does not include transmission assets. There are exceptions to certain ownership conditions, and the EDTI Ownership Definitions shall be read in conjunction with the Exceptions. In instances where ownership is not defined in this guide, EDTI Distribution Asset Management shall determine ownership in alignment with applicable laws, regulations, standards and industry practices.

EDTI Distribution Asset Ownership Definitions

"Civil Works" – as defined in the Terms and Conditions.

"EDTI" – EPCOR Distribution & Transmission Inc., as defined in the Terms and Conditions.

"Downstream"* or *"downstream" – away from the utility-provided power source.

"Fringe Customer" – a customer serviced by another power utility within EDTI's service territory.

"Point of Service" - as defined in the Terms and Conditions and as further detailed below:

- For Residential Overhead Services, the mast head shall be considered the Point of Service.
- For Residential Underground Services, the Point of Service shall be the point at which the secondary underground cable crosses the property line.
- For Commercial, Industrial, and Multi-Family Residential Units ("**MFUs**"), the Point of Service shall be the secondary bus on the transformer or pedestal; whichever is the device that is further downstream. For primary metered services (underground), the point of service is the switchgear.
- For street lights and traffic lights the Point of Service is the first point of disconnect. This is a breaker or lug in the first light, pedestal, or control cabinet.

"Service Entry Point" - the civil infrastructure connection point at which EDTI's civil infrastructure ends and is connected to the Customer's property or civil infrastructure.

"***Terms and Conditions***" means EDTI's Terms and Conditions for Distribution Connection Services.

"Upstream"* or *"upstream" – towards the utility-provided power source.

EDTI Asset Ownership Table

Asset Type	EDTI Ownership Definition	Exceptions	Notes
Overhead Distribution Systems			
Poles	• All poles with primary overhead wire and EDTI-owned communication infrastructure. • All poles on public property with secondary overhead wire. • Any pole on private property that serves multiple customers, or is the last pole in a line of poles on servicing multiple customers. • Any pole with security lighting upstream of a meter.	• EDTI does not own poles on private property that have primary overhead wire downstream of a metering point. • EDTI does not own poles on public property that only serve street light, and/or traffic lighting. • EDTI does not own poles that are located on the shared property line between two private properties that serve only the two properties with secondary service. • EDTI does not own a pole where it only has communicatio n wires. • EDTI does not own a pole where it only provides	• Where a pole is on private property and does not meet the EDTI ownership definition, the pole is considered a fixture of the property, and shall be defined as the property and responsibility of the property owner, subject to any easements or rights-of-way between EDTI and the property owner registered on the property. This includes poles on the property line between two private properties, providing secondary service to one or more properties.

Asset Type	EDTI Ownership Definition	Exceptions	Notes
		support to a communication guy. • Fringe Customers	
Overhead Wire - Primary	• All primary overhead wire upstream of any meter.	• EDTI does not own primary overhead wire that is downstream of a metering point. • Fringe Customers	
Overhead Wire - Secondary	• All secondary overhead wire upstream of a Point of Service.	• EDTI does not own secondary overhead wire that only serve street light and/or traffic lighting, downstream of the Point of Service. • Fringe Customers	
Security Lighting	• All unmetered luminaires, bases, poles, overhead wire, UG secondary and equipment provided by EDTI.		
Guys/Downhauls - Anchors	• All primary and secondary guys and anchors attached to EDTI-owned poles.	• Communication guys and anchors communication companies. • Fringe Customers	• Anchors transfer with the pole when EDTI removes its power assets and transfers the pole to Telecommunication companies.
Underground Distribution Systems			
Pad / Pedestal Base	• All pads and pedestal bases upstream of	• EDTI does not own a	• Pads and pedestal bases shall be

Asset Type	EDTI Ownership Definition	Exceptions	Notes
	any meter or Point of Service, including those where the device on the pad or pedestal base contains the Point of Service.	pad/pedestal base that is integral to a customer's building structure.	deemed to include the associated civil works, guardrail, and grounding.
Pedestal (Powerbase)	• All pedestals upstream of any meter or Point of Service, including those where the device on the pad or pedestal base contains the Point of Service.	• EDTI does not own pedestals which are built to Part 1 of the CEC. • EDTI does not own the pedestal if it is considered the Point of Service for a streetlight or traffic light service, and does not contain primary, and/or does not provide secondary services for non-streetlight and traffic light Customers.	• If the pedestal also has a davit welded to the pedestal, EDTI owns the davit, but not the light fixture. • If the pedestal has a davit bolted to the pedestal, EDTI does not own the davit or light fixture.
Pad-Mounted/Underground Transformers	• All pad-mounted/underground transformers upstream Point of Service.		
Pad-Mounted/Underground Switches	• All pad-mounted/underground switches upstream of Point of Service or meter.		
Underground Cable - Primary	• All primary underground cable		

Asset Type	EDTI Ownership Definition	Exceptions	Notes
	upstream of Point of Service.		
Underground Cable - Secondary	• All secondary underground cable upstream of any meter or Point of Service, whichever is further upstream.		
Manholes, Hand-Holes, Vaults	• All manholes, hand-holes and vaults containing EDTI equipment upstream of any meter or Point of Service, whichever is further downstream.		Manholes, hand-holes, and vaults shall be deemed to include the associated civil works, guardrails, and grounding.
Duct Lines/Duct Banks	• All duct lines and duct banks containing EDTI equipment upstream of any meter, Point of Service, or Service Entry Point, whichever is further downstream.		